industrial

INDUSTRIAL

Unical® AG S.p.A.

Unical was founded in 1972 by a young engineer, Giovanni Jahier, to design and produce boilers for domestic and industrial applications.
The company later expanded its product portfolio to include air conditioning systems, radiant panels, solar panels, etc., forming one of the industry's most complete catalogues.
Unical has always seen – and still sees – improving the quality of life as one of its top priorities.
This means maintaining a commitment to improving comfort and safety, reducing energy consumption and respecting the environment.

Made in Italy: the Unical's focus.

Unical operates four plants around the country to cover production and logistics, all strategically interconnected and equipped with the latest automatic and robotic assembly lines.

Our Caorso plant produces wall-mounted and floor-standing boilers, both traditional and condensing, (up to 900 kW), while our Carbonara Po plant focuses on biomass fuelled boilers and steel boilers for use with jet burners (up to 7,000 kW).

Our industrial range covers generators of up to and over 14,000 kW, and includes special high efficiency boilers with patented heat exchange tubes.

Unical

INDUSTRIAL

MAR. 2019 n° 02

Unical

PROFESSIONAL

INDUSTRIAL

DOMESTIC

BIOMASS

SOLAR

INTEGRATED SYSTEMS

HEAT PUMPS

AIR CONDITIONING

RADIANT SYSTEMS

CONTENTS

TERNOX 2S

PRESSURIZED GENUINE THREE-PASS HOT WATER BOILER									
OUTPUT RANGE	from 2200 to 15000 kW								
WORKING TEMPERATURE	up to 110°C								
FUEL	natural gas, LPG, light oil, heavy oil jet burners								
Low NOx version MODELS	2200	3050	3800	5000	6300	7500	9500	11300	14000
STD version MODELS	2500	3500	4500	5800	7000	8500	10200	12500	15000

CERTIFICATION IN OUTPUT RANGE / Low NO_x emissions

DESCRIPTION

High pressure packaged hot water boiler, three-pass fire tube, horizontal design.

TERNOX 2S is a family of packaged smoke tube hot water boilers, genuine three-pass, and wet back. Standard safety pressure up to 6 bar (higher pressure available on request) and output from 2200 to 15000 kW. It can be operated with liquid or gaseous fuels. Designed and manufactured according to EN 303-1. CE certification.

Design features:

By means of the three-pass design the smoke gases in the combustion chamber are diverted to the front through the first set of fire tubes by the reversing chamber; then reversed again by the frontal smoke box to the second smoke tube sections and discharged through the chimney connection. The appliance is designed to ensure low heating loads in the combustion chamber, low superficial loads and low NOx emissions (with Low NOx burners).

- **Boiler body:** is made of a cylindrical shell and a wet back furnace, welded to tube plates, made of high quality steel. All the materials have certificates attesting their chemical and mechanical characteristics, the controls are carried out during each production stage, and, theirs suitability for use as well. The welding seams are carried out by qualified personnel in compliance to certified procedures. Once the boilers have been manufactured they are subjected to hydraulic testing.
- **Smoke tubes:** made of high quality steel, are welded to tube plates, and are without helical turbulators.
- **Reversing chamber:** is built in welded steel plate, completely water-cooled, and connected to the rear smoke-box.
- **Front door:** is built in welded steel plate, completely cladded internally with a layer of insulation material and with a layer of high density refractory material. One or two doors are present according the boiler's capacity, for cleaning and inspection. Close to the burner hole is present a self-cleaning sight glass for combustion control during boiler operation.
- **Rear smoke-box:** is built in welded steel plate, completely cladded internally with a layer of insulation material and with a layer of high density refractory material. Door for cleaning and inspection is present as well. Complete with an horizontal chimney connection with a diameter sized to the boiler's output. The rear smoke-box can be accessorized with and external economizer or condenser.
- **The base:** is built with a steel frame, welded to the tube plates.
- **Walkway:** positioned on the top part of the boiler, is made of steel, covered with chequered plate and completed; on request with handrail and access ladder.
- **Insulation:** the shell is thermally insulated with a rock wool cladding binded with high density, thick thermosetting resins, suitably supported and covered externally in aluminum.

Standard equipment: (1)

- Blind burner plate.
- Lifting lugs.
- Document folder enclosing:
  - Installation, operation and service manuals.
  - Water characteristics: requirements concerning the quality of water supply, the water in the boiler, frequency and type of sample tests to do.

(1) The quantity and the model may vary according to the configuration.

Optional accessories:
- Economizer to increase boiler efficiency, available either for gas or light oil fuel.
- Condensing heat recovery unit, available for gaseous fuel only.

MAIN COMPONENTS

1. Boiler body
2. Front door
3. Rear smoke chamber
4. Board panel

T1. Flow
T2. Return
T3. Expansion vessel connection
T4. Boiler drain
T5. Chimney connection

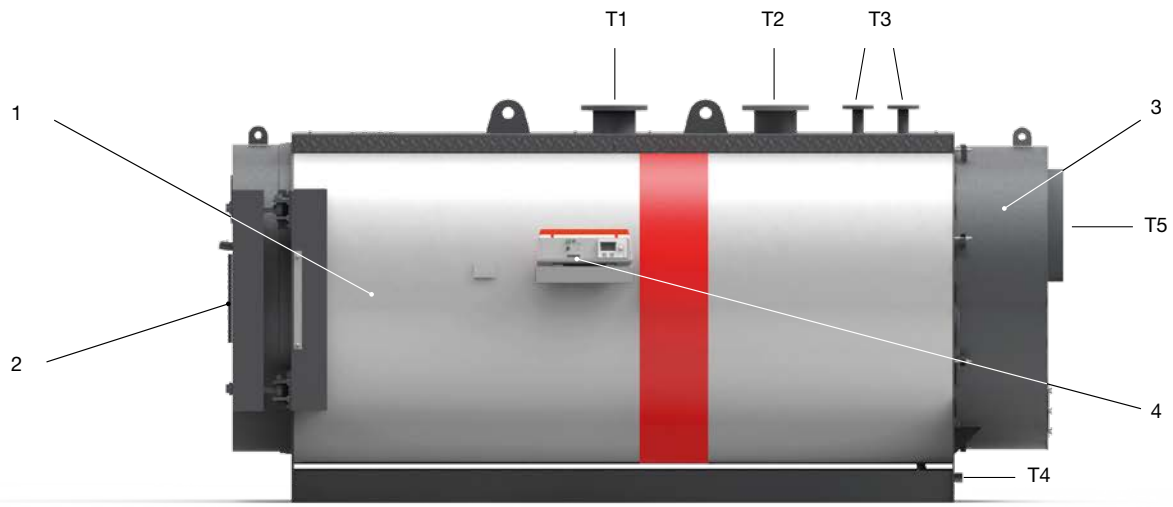

TECHNICAL DATA (STD version)

TERNOX 2S STD	Nominal output	Nominal input	Efficiency at full load	Efficiency at part load (30%)	Water content	ΔP smoke side	Smoke side pressure	Empty Weight	CONNECTIONS (Ø)			
									T1/T2	T3	T4	T5
	kW	kW	%	%	lt	mbar	bar	kg	ø mm	ø mm	ø mm	øi mm
2500 STD	1800÷2500	1951÷2753	92.25÷90.8	94.25÷92.8	3790	3.8÷7.5	6	5500	200	50	1"1/2	570
3500 STD	2350÷3500	2537÷3848	92.64÷90.95	94.64÷92.95	4750	7.5÷8.0	6	7000	200	65	1"1/2	620
4500 STD	3000÷4500	3239÷4950	92.62÷90.9	94.62÷92.9	6400	3.6÷8.5	6	8200	250	80	1"1/2	660
5800 STD	4000÷5800	4324÷6381	92.5÷90.9	94.5÷92.9	8060	4.4÷9.5	6	10000	250	80	1"1/2	660
7000 STD	5100÷7000	5528÷7705	92.25÷90.85	94.25÷92.85	9760	4.9÷9.5	6	11500	250	100	1"1/2	720
8500 STD	5700÷8500	6169÷9377	92.4÷90.65	94.4÷92.65	11480	4.8÷11	6	13500	250	100	1"1/2	820
10200 STD	8400÷10200	9128÷11192	92.02÷91.14	94.02÷93.14	14960	8.3÷12.5	6	17300	300	100	1"1/2	820
12500 STD	10100÷12500	11012÷13789	91.71÷90.65	93.71÷92.65	24100	8.9÷14.0	6	25500	300	125	60	820
15000 STD	12200÷15000	13251÷16458	92.07÷91.14	94.07÷93.14	27300	9.7÷15.0	6	30000	350	125	60	1000

TECHNICAL DATA (Low NOx version)

TERNOX 2S Low NOx	Nominal output	Nominal input	Efficiency at full load	Efficiency at part load (30%)	Water content	ΔP smoke side	Smoke side pressure	Empty Weight	CONNECTIONS (Ø)			
									T1/T2	T3	T4	T5
	kW	kW	%	%	lt	mbar	bar	kg	ø mm	ø mm	ø mm	øi mm
2200 Low NOx	1800÷2200	1951÷2406	92.25÷91.45	94.25÷93.45	3790	3.8÷5.7	6	5500	200	50	1"1/2	570
3050 Low NOx	2350÷3050	2537÷3329	92.64÷91.62	94.64÷93.62	4750	3.5÷6.0	6	7000	200	65	1"1/2	620
3800 Low NOx	3000÷3800	3239÷4144	92.62÷91.7	94.62÷93.7	6400	3.6÷6.0	6	8200	250	80	1"1/2	660
5000 Low NOx	4000÷5000	4324÷5457	92.5÷91.62	94.5÷93.62	8060	4.4÷6.9	6	10000	250	80	1"1/2	660
6300 Low NOx	5100÷6300	5528÷6892	92.25÷91.41	94.25÷93.41	9760	4.9÷7.6	6	11500	250	100	1"1/2	720
7500 Low NOx	5700÷7500	6169÷8215	92.4÷91.3	94.4÷93.3	11480	4.8÷8.4	6	13500	250	100	1"1/2	820
9500 Low NOx	8400÷9500	9128÷10377	92.02÷91.55	94.02÷93.55	14960	8.3÷10.7	6	17300	300	100	1"1/2	820
11300 Low NOx	10100÷11300	11012÷12390	91.71÷91.2	93.71÷93.2	24100	8.9÷11.3	6	25500	300	125	60	820
14000 Low NOx	12200÷14000	13251÷15294	92.07÷91.54	94.07÷93.54	27300	9.7÷12.9	6	30000	350	125	60	1000

PRODUCT PLUS VALUES

- **FLEXIBILITY**
  thanks to the certification in output range
- **LOW EMISSIONS NO_x < 80 mg/kWh**
  thanks to the reduction of the specific thermal load for Low NOx version
- **FURNACE BOTTOM**
  completely wet
- **JUST ONE FRONT DOOR**
  (up to the model 10200)
  with self centring closing system completely adjustable
- **TWO FRONT DOORS**
  (from model 12500)
  tube bundles cleaning facility
- **DOOR INTERNAL INSULATION**
  in super light recyclable refractory concrete
- **BODY INSULATION**
  with anti-tearing mineral wool mattress
- **BOARD PANEL**
  thermo-mechanical or electronic
- **POSSIBLE COMBINATION**
  with one/two stage or modulating burners, operated on gas/LPG, light oil or heavy oil
- **EASY TRANSPORTATION**
  thanks to the upper lifting lugs and the strong frame side members

DIMENSIONS

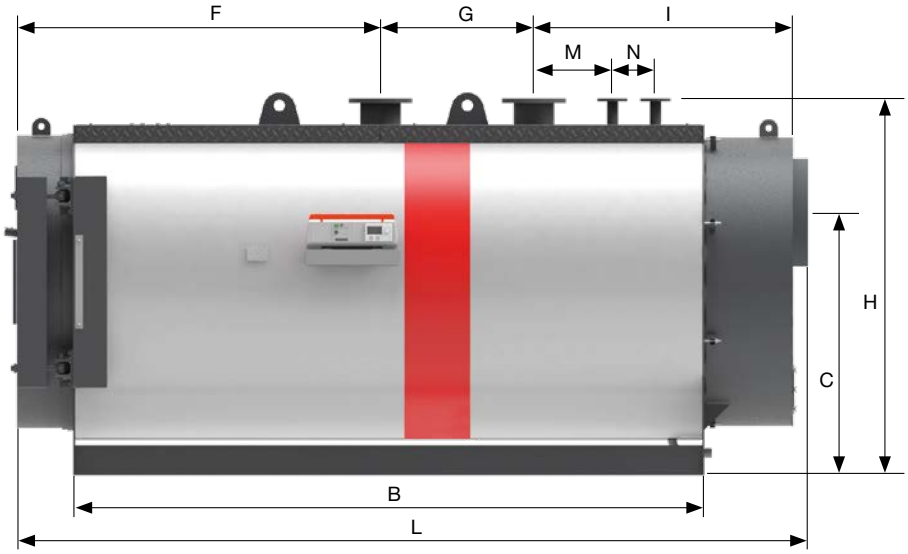

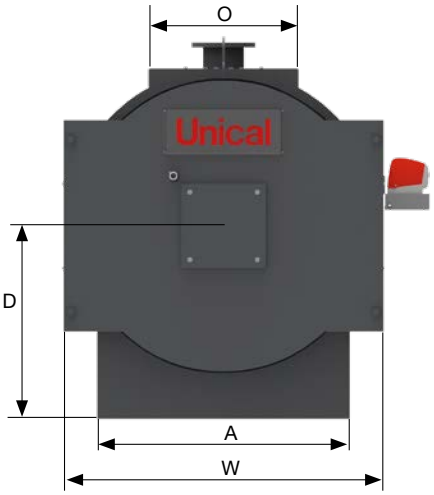

TERNOX 2S STD	W	L	H	A	B	C	D	F	G	I	M	N	O
	mm	mm	mm	mm	mm	mm	mm	mm	mm	mm	mm	mm	mm
2500 STD	1710	4225	2010	1350	3370	1400	1030	1940	820	1465	420	230	800
3500 STD	1830	4711	2120	1450	3824	1480	1080	1954	1140	1617	570	250	800
4500 STD	1980	5134	2360	1550	4174	1620	1180	2017	1380	1737	550	300	800
5800 STD	2180	5639	2580	1710	4626	1780	1300	2451	1400	1788	600	300	800
7000 STD	2320	5875	2700	1850	4840	1870	1350	2505	1510	1860	550	350	880
8500 STD	2400	6420	2870	1900	5350	1980	1460	2035	2590	1795	480	350	880
10200 STD	2650	6772	3080	2080	5632	2080	1560	1406	3450	1916	550	350	1000
12500 STD	3210	7211	3715	2400	6236	2700	1480	1643	3500	2068	650	400	1470
15000 STD	3320	7761	3910	2500	6736	2750	1583	1693	4000	2068	650	400	1470

TERNOX 2S Low NOx	W	L	H	A	B	C	D	F	G	I	M	N	O
	mm	mm	mm	mm	mm	mm	mm	mm	mm	mm	mm	mm	mm
2200 Low NOx	1710	4225	2010	1350	3370	1400	1030	1940	820	1465	420	230	800
3050 Low NOx	1830	4711	2120	1450	3824	1480	1080	1954	1140	1617	570	250	800
3800 Low NOx	1980	5134	2360	1550	4174	1620	1180	2017	1380	1737	550	300	800
5000 Low NOx	2180	5639	2580	1710	4626	1780	1300	2451	1400	1788	600	300	800
6300 Low NOx	2320	5875	2700	1850	4840	1870	1350	2505	1510	1860	550	350	880
7500 Low NOx	2400	6420	2870	1900	5350	1980	1460	2035	2590	1795	480	350	880
9500 Low NOx	2650	6772	3080	2080	5632	2080	1560	1406	3450	1916	550	350	1000
11300 Low NOx	3210	7211	3715	2400	6236	2700	1480	1643	3500	2068	650	400	1470
14000 Low NOx	3320	7761	3910	2500	6736	2750	1583	1693	4000	2068	650	400	1470

BURNER BLAST TUBE DIMENSIONS

BOILER TYPE	øA mm	L (min/max) mm
2200 Low NOx / 2500 STD	400	370/520
3050 Low NOx / 3500 STD	400	370/520
3800 Low NOx / 4500 STD	500	410/560
5000 Low NOx / 5800 STD	500	410/560
6300 Low NOx / 7000 STD	500	410/560
7500 Low NOx / 8500 STD	500	450/650
9500 Low NOx / 10200 STD	500	450/650
11300 Low NOx / 12500 STD	650	450/650
14000 Low NOx / 15000 STD	650	450/650

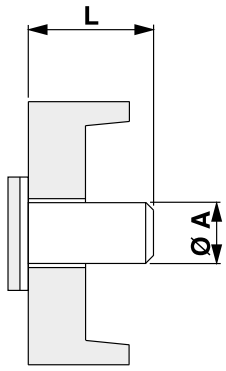

CONDENSER “COND” (optional) FOR RANGE 2500 ÷ 7000 kW

Condensers are availble as optional kits for the heat recovery of flue gases.
Medium efficiency recovery:
6÷8% at 100% load, return temp. 60°C
Material: stainless steel, alluminium

BOILER TYPE	CONDENSER TYPE
2200 Low NOx / 2500 STD	COND 2500
3050 Low NOx / 3500 STD	COND 3500
3800 Low NOx / 4500 STD	COND 4500
5000 Low NOx / 5800 STD	COND 5800
6300 Low NOx / 7000 STD	COND 7000

Steel pressurised boilers TERNOx 2S with condenser reach four stars of efficiency ★★★★CE
The inlet temperature at the boiler return connection must be > 55°C in any working conditions.

CONSTRUCTION CHARACTERISTICS OF COND

Heat exchanger flue / water, realizzed in the tube bundle made of special patented stainless steel AISI 316 L tubes, equipped with special multilammelar and progressive aluminum / silicon / magnesium inserts, completely rolled.

- Flanged connections for water inlet and outlet
- Box for connection boiler/chimney
- Connection for condensate drain
- Smoke temperature measuring point

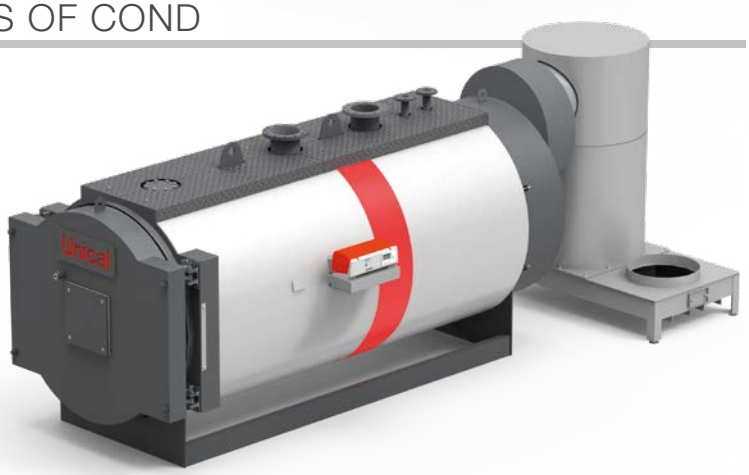

COND 2500		TERNOX 2500 2S STD	TERNOX 2200 2S Low NOx
COMBUSTION CHAMBER INPUT min/max	kW	1951 / 2753	1951 / 2406
RECOVERY (load 100%, Return temperature 60°C) min/max	%	6.15 / 7.85	6.15 / 7.07
EFFICIENCY WITH COND (load 100%, Return temperature 60°C) min/max.	%	98.40 / 98.65	98.40 / 98.52
COND 3500		**TERNOX 3500 2S STD**	**TERNOX 3050 2S Low NOx**
COMBUSTION CHAMBER INPUT min/max	kW	2537 / 3848	2537 / 3329
RECOVERY (load 100%, Return temperature 60°C) min/max	%	5.72 / 7.64	5.72 / 6.85
EFFICIENCY WITH COND (load 100%, Return temperature 60°C) min/max.	%	98.35 / 98.59	98.35 / 98.47
COND 4500		**TERNOX 4500 2S STD**	**TERNOX 3800 2S Low NOx**
COMBUSTION CHAMBER INPUT min/max	kW	3239 / 4951	3239 / 4144
RECOVERY (load 100%, Return temperature 60°C) min/max	%	5.71 / 7.68	5.71 / 6.76
EFFICIENCY WITH COND (load 100%, Return temperature 60°C) min/max.	%	98.34 / 98.57	98.34 / 98.46
COND 5800		**TERNOX 5800 2S STD**	**TERNOX 5000 2S Low NOx**
COMBUSTION CHAMBER INPUT min/max	kW	4324 / 6381	4324 / 5457
RECOVERY (load 100%, Return temperature 60°C) min/max	%	5.78 / 7.44	5.78 / 6.69
EFFICIENCY WITH COND (load 100%, Return temperature 60°C) min/max.	%	98.28 / 98.34	98.28 / 98.31
COND 7000		**TERNOX 7000 2S STD**	**TERNOX 6300 2S Low NOx**
COMBUSTION CHAMBER INPUT min/max	kW	5529 / 7705	5529 / 6892
RECOVERY (load 100%, Return temperature 60°C) min/max	%	6.06 / 7.66	6.06 / 6.96
EFFICIENCY WITH COND (load 100%, Return temperature 60°C) min/max.	%	98.31 / 98.51	98.31 / 98.37

Condensate Neutralizer Kit NH 1500 - P (optional)

ECONOMIZER (optional)

The economizers for the recovery of the residual heat from the smokes at the outlet of the boiler, are available as optional kits.

Average efficiency recovery: 3 to 4%, with remarkable fuel saving.

Material: Carbon steel; on request stainless steel.

BOILER TYPE	ECONOMIZER TYPE
2200 Low NOx / 2500 STD	Eco type 1
3050 Low NOx / 3500 STD	Eco type 2
3800 Low NOx / 4500 STD	Eco type 3
5000 Low NOx / 5800 STD	Eco type 4
6300 Low NOx / 7000 STD	Eco type 5
7500 Low NOx / 8500 STD	Eco type 6
9500 Low NOx / 10200 STD	Eco type 7
11300 Low NOx / 12500 STD	Eco type 8
14000 Low NOx / 15000 STD	Eco type 9

TECHNICAL FEATURES

Heat exchanger smoke / water with exchange battery with finned pipes suitable for operation with natural gas / LPG or light oil.

- Flanged connections for water inlet and outlet
- Box for connection boiler /chimney
- Connection for condensates drain
- Smoke temperature measuring point

The economizers are available in **two versions**:

- Version for operation with gaseous fuels
- Version for operation with light oil or dual fuel (gas & oil) burners

Economizer available in the overlapped version (optional)

BOARD PANELS (optional)

STANDARD

The standard board panel is equipped with:

- Series of switches
- Thermometer
- Safety thermostat
- Two stage working thermostat
- Minimum temperature thermostat (for C.H. pump – inside the board panel)

MASTERMODUL
MASTERBISTADIO

The board panels MASTER MODUL and MASTERBISTADIO, for high temperature working, are equipped with:

- E8 controller
- Lago Basic controller for burner
- Outer temp. sensor
- Boiler temp. sensor
- D.H.W. storage tank temperature sensor
- C.H. flow temp. sensor
- Primary circuit temperature sensor
- Series of switches
- Safety thermostat

CASCATAMODUL
CASCATABISTADIO

The board panels CASCATAMODUL e CASCATABISTADIO are equipped with:

- Lago Basic controller for burner
- Boiler temperature sensor
- Series of switches
- Safety thermostat

THERMOREGULATION E8 (optional)

SYSTEM OPTIMIZATION

BOILER HEATING OPTIMIZATION
The heating controller, on the basis of the timer/heating programme set by the user, once the system's characteristics have been evaluated, will activate the function for automatically bringing forward the heating ignition time so as to ensure that the set temperature is reached at the time requested by the user.

FAST SET TEMPERATURE
This is obtained by calculating the optimum ignition start-up time. This calculation can be carried out taking into consideration the outdoor temperature or the room temperature.

OVERHEATING PROTECTION
The boiler's safety temperature is controlled via the pump's overrun time, in order to get rid of any thermal inertia.

SELF-ADAPTION
Through the elaboration of data transmitted by the room sensor, this function adjusts the boiler's ouput to the building's characteristics, ensuring a constant monitoring of the indoor temperature on the basis of the variation of the outdoor temperature, keeping in consideration the building's thermal inertia and the contribution of "free" heat (solar radiation, internal heat sources etc).

SLOPE OFFSET (HEATING SLOPE DISTANCE)
The boiler temperature that is required for a mixed circuit is calculated by adding to the calculated temperature setting for the heating circuit temperature the heating slope distance. The heating slope distance compensates for sensor tolerances and heat loss up to the mixer.

VALVE OPENING TIME
Based on the characteristics of the servomotor

NUMBER OF BURNER IGNITIONS
It stabilizes the number of ignitions of each burner.

BURNER RUN HOURS
It stabilizes the run hours of each burner.

FROST PROTECTION MODE
The frost protection operation mode prevents the CH system from freezing by automatically switching heating operation on. In the frost protection mode, the room temperature for all the heating circuits is set to 5°C and the storage tank sensor frost protection is activated when the temperature drops below 10°C.

SETTING

PROGRAMME SETTING
The heating programmes can be set daily or weekly, with more than one On-Off firing times or temperature reductions during the arch of the day.

MULTIPLE ZONE CONTROL
With the same heating control device you can control 2 independent circuits with different characteristics, though having ensured all the described functions, including the deep sliding temperature function.

0-10 VOLT SIGNAL
the great flexibility of the E8 also permits the TERNOX 2S set point to be controlled by an external control signal. This will enable, having at disposal an even more complex system, to exploit all the heating control's functions.

MANAGEMENT OF UP TO 15 MIXED CIRCUITS
controlled by the outdoor sensor.

ENERGY SOURCES CONTROL

INTEGRATION WITH RENEWABLE ENERGY SOURCES
As for example: solar systems and/or solid fuel fired boilers.

BOARD PANELS FLAT_W (optional)

- Management of boiler safety devices with signalling on the burner start terminal board and alarms (boiler safety devices + burner block cumulative)
- Possible anti-condensation pump management
- 3Ph - 400V - 50Hz Power supply; burner power supply, transformer for auxiliary burner power supply
- Metal containment cabinet with IP54 protection rating, size H=700, L=500, D=250, held up by ground support
- Digital control instrument for controlling operating temperatures on the panel, 0-10V input for generator set-point remote control
- Built according to European standards

BOARD PANELS IML_W (optional)

- Control PLC, 7” touch screen display with graphic interface, remote communication via Modbus, 0-10V input for generator set-point control, etc.
- Single, two-stage and three-stage or modulating burner control
- Boiler safety devices management with alarm signals
- Possible anti-condensation pump management
- 3Ph - 400V - 50Hz Power supply; burner power supply, transformer for auxiliary burner power supply
- Metal containment cabinet with IP54 protection rating, size H=1000, L=500, D=250, held up by ground support
- Built according to European standards

BOILER SAFETY KIT (optional)

- Instrument wood log to be mounted on the boiler flow, complete with all connections required for the on-site safety and control instrumentation and in particular:
  - pressure gauge valve with test flange
  - large dial thermometer and pressure gauge of an adequate scale
  - minimum and maximum safety pressure switch
  - manifold with siphon to position the pressure gauge and pressure switches
  - 2 manually resettable safety thermostats
- Available upon request: EC approved safety valves with adequate calibration pressure, designed to discharge the total boiler power.

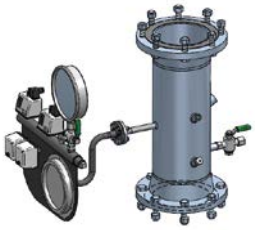

LADDER AND WALKWAY KIT (optional)

Ladder and walkway with carbon steel railing, painted with special rust-proof paint and welded by joints that ensure the correct coupling of every element.

Easy access to the boiler is guaranteed by:

- a handrail welded to the frame;
- steps with non-slip inserts.

The ladder position and handrail layout can be agreed upon at the time of order, to fit the installation site of the generator.

HIGH EFFICIENCY OPTION

Option to supply a generator with 94-95% efficiency levels.

An aluminium profile, bound by rolling, is positioned within the smoke pipes forming the tube bundle of the third flue gas pass, namely in the end section, to significantly increase efficiency. This allows you to increase the exchange surface without increasing the generator size or adding external devices, as a result of a higher pressure drops (counter pressure) of the boiler body.

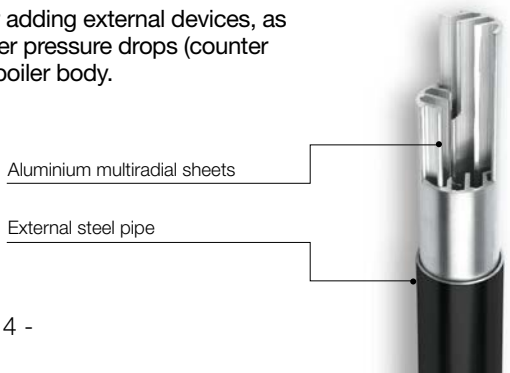

BREVETTO Unical PATENT

SÜHR' OR

SUPERHEATED WATER BOILER, THREE PASS REVERSE FLAME, AT MEDIUM AND HIGH PRESSURE - 90% EFFICIENCY							
OUTPUT RANGE	from 140 to 2900 kW						
TYPE	OR						
	smooth pipe						
FUEL	gas, light & heavy oil						
WORKING PRESSURE	4.9 bar (SÜHR' 5) / 9.8 bar (SÜHR' 10)						
WORKING TEMPERATURE	158.1°C (SÜHR' 5) / 183.2°C (SÜHR' 10)						
MODELS	140	210	270	370	465	580	700
	1000	1160	1400	1750	2050	2300	2900

DESCRIPTION

Superheated water boiler, three pass reversed flame, smooth pipes with turbulators, 90% efficiency [1].

SUHR' OR is a family of packaged smoke tube superheated water boilers, three pass reversed flame, wet back. Standard safety pressure up to 5 bar (SÕHR' 5) or 10 bar (SÕHR' 10), higher pressure available on request, and output from 140 to 2900 kW. It can be operated with liquid or gaseous fuels. Every model is complete with regulations and safety accessories for automatic operation and easy commissioning.
In compliance to the current laws, each superheated boiler undergoes a conformity assessment, carried out by a Notified Body.
The conformance to the essential safety requirements demanded by the European Pressure Equipment Directive 2014/68/UE (PED) is guaranteed by the CE mark.

Design features:

By means of the reverse flame principle the smoke gases in the combustion chamber are diverted to the front, then reversed again to the smoke tube sections and discharged through the chimney connection. The appliance is designed to ensure low heating loads in the combustion chamber and low superficial loads.

- **Boiler body:** is made up of a cylindrical shell and a wet back furnace, made of high quality steel. All the materials have certificates attesting their chemical and mechanical characteristics, the controls are carried out during each production stage, and, theirs suitability for use as well. The welding seams are carried out by qualified personnel in compliance to certified procedures and are subjected to Non Destructive Tests, in accordance to an internal "Manufacturing and Control" program. Once the boilers have been manufactured they are subjected to hydraulic testing in accordance to the requirement 7.4 – Annex I, laid down in the Directive 2014/68/UE (PED).
- **Smoke tubes:** made of high quality steel, are welded to tube plates. Pipes are equipped with helical turbulators.
- **Front door:** is built in welded steel plate, completely cladded internally with a layer of insulation material and with a layer of high density refractory material. The door is fitted with hinges which enable it to be easily adjusted and quickly opened. Moreover, the door is fitted with a self-cleaning sight glass for combustion control during boiler operation.
- **Rear smoke-box:** is built in welded steel plate and fixed on to the tube plate by nuts for an easy access to it. It is fitted with a small door for cleaning purposes and the horizontal flue connection (vertical on request), with a diameter sized to the boiler's output. The rear smoke-box can be accessorized with and external economizer.
- **Basement:** is built with a steel frame, welded to the tube plates and closed with steel plates.
- **Insulation:** the shell is thermally insulated with rock wool cladding, suitably supported and covered externally in 10/10 thick enamelled aluminum.

Standard equipment: [2]

- n. 1 or 2 spring loaded safety valves (according boiler's capacity).
- n. 1 manual draining group.
- Control board panel complete with:
  - n. 1 thermometer
  - n. 2 working thermostats
  - n. 1 safety thermostat with manual reset
  - n. 1 manometer
  - n. 1 safety pressure switch with manual reset.
- Blind burner plate.
- Carbon steel turbulators.
- Lifting lugs.
- Document folder enclosing:
  - Manufacturer's Declaration of Conformity in compliance with the Annex VII of the European Directive 2014/68/UE (PED)
  - Installation, operation and service manuals.
  - Certificates of safety components.
  - Control board's electric schemes and related Declaration of Conformity.
  - Water characteristics: requirements concerning the quality of water supply, the water in the boiler, frequency and type of sample tests to do.

(1) This value is intended without economizer and may change according working pressure and load conditions.
(2) The quantity and the model may vary according to the configuration.

MAIN COMPONENTS

1. Boiler body
2. Front door
3. Rear smoke chamber
4. Board panel
5. Man hole for inspection
6. Safety pressure switch
7. Manometer with 3 way cock for calibration purposes
8. Safety valves

T1. Flow
T2. Return
T3. Boiler drain
T4. Chimney connection

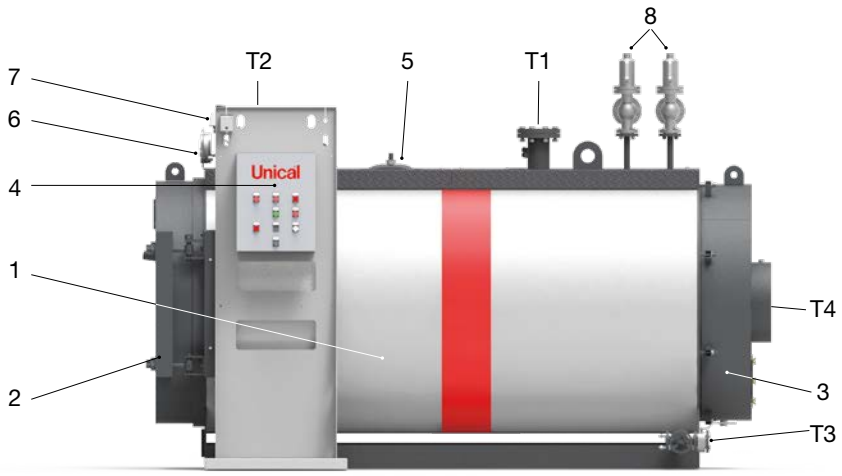

TECHNICAL DATA

Model	Nominal output	Nominal input	ΔP smoke side	Water content	Water side pressure drop (ΔT 15°C)	Empty weight SÜHR' 5 OR	Empty weight SÜHR' 10 OR
	kW	kW	mbar	l	mbar	kg	kg
140	140	157	2.0	335	3.7	765	930
210	210	223	2.5	549	8	1090	1330
270	268	300	3.0	549	13	1090	1330
370	372	418	4.2	690	11	1550	1890
465	465	523	4.5	690	17	1550	1890
580	581.5	653	5.0	1143	12	1690	2060
700	700	784	6.0	1143	18	2080	2540
1000	1000	1125	7.0	1625	22	2595	3165
1160	1160	1289	5.5	1625	20	2595	3165
1400	1395	1567	6.0	1950	22	3220	3930
1750	1745	1960	7.0	2575	25	4730	5770
2050	2035	2287	8.2	2575	30	4730	5770
2300	2325	2613	9.0	3015	40	5795	7070
2900	2900	3223	9.5	4290	45	6910	8430

DIMENSIONS

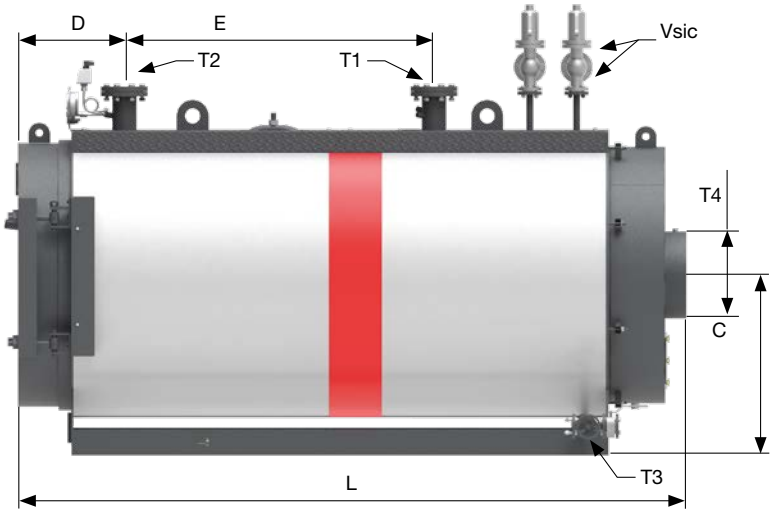

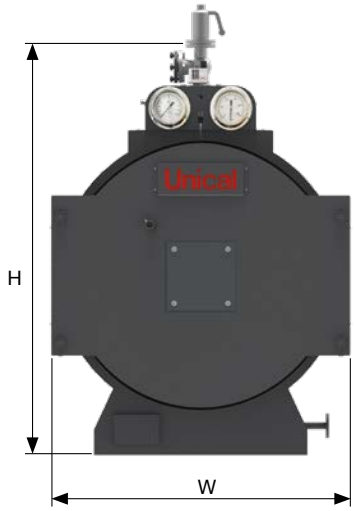

Model	W	L	H	C	D	E	T1 - T2	T3	T4	Vsic
	mm	mm	mm	mm	mm	mm	DN	DN	Øi mm	DN
140	900	1900	1230	550	200	650	65	25	202	20/32
210	1000	2125	1270	600	200	800	65	25	222	20/40
270	1000	2125	1270	600	200	800	65	25	222	20/40
370	1115	2424	1327	675	200	1010	80	25	252	20/40
465	1115	2424	1327	675	200	1010	80	25	252	20/40
580	1270	2792	1500	765	200	1140	80	25	352	20/40
700	1270	2792	1500	765	200	1140	80	25	352	20/40
1000	1400	3200	1660	865	250	1450	100	25	402	25/40
1160	1400	3200	1660	865	250	1450	100	25	402	25/40
1400	1510	3426	1770	920	300	1570	125	25	402	40/50
1750	1720	3500	2030	1075	300	1600	150	40	502	40/50
2050	1720	3500	2030	1075	300	1600	150	40	502	40/50
2300	1800	3875	2120	1115	300	1700	200	40	552	40/50
2900	1980	4195	2290	1205	300	1850	200	40	602	40/65

PRODUCT PLUS VALUES

- **FRONT DOOR**
  Fitted on hinges, with reversible opening. It is in welded steel sheet, with the inside completely insulated with refractory concrete. Complete with burner plate and flame sight glass
- **REAR SMOKE CHAMBER**
  Made of steel sheet and complete of horizontal chimney connection (vertical on request) and cleaning openings
- **BASEMENT**
  In steel profiles
- **THERMAL INSULATION**
  Made of a mineral wool mattress, externally protected by painted aluminum panels
- **DELIVERY**
  Is complete with board panel "FLAT_SH", safety and control devices

STANDARD-PRODUCTION EQUIPMENT

- Insulation with aluminum cladding
- Turbulators
- Spring actuated safety valve(s)
- Manual draining group
- N. 1 dial type thermometer
- N. 1 dial type manometer with 3 way cock for calibration purposes
- N. 2 working thermostats
- N. 1 manual reset safety thermostat
- N. 1 manual reset safety pressure switch

BOARD PANELS (optional)

IMC_SH

- Single and two-stage burner control
- Possible 24/72 h exemption
- No. 1 low level safety PED level switch (optional)
- Terminal board on quick coupling connectors
- Expansion with optional kits
- IP55 Protection rating

IML_SH

- Control PLC
- 7" touch screen display with graphic interface
- Single and two-stage, three-stage, modulating burner control
- Possible 24/72 h exemption
- No. 1 low level safety PED level switch (optional)
- Terminal board on quick coupling connectors
- Expansion with optional kits
- IP55 Protection rating

OPTIONAL EQUIPMENT

24 h EXEMPTION KIT
Set of accessories to obtain the partial exemption of the burner (24 h) according to L.D. 25 February 2000 no.93, MD 1 December 2004, no.329, UNI/T S 11325-3:2010.
Consisting of:
- 24h exemption control panel including a timer and preset for a 24h exemption reset procedure
- Instrument/safety device wood log to be mounted on the boiler flow, with all equipment required and namely:
- 1 pressure gauge with a pressure gauge valve
- 1 large dial thermometer with a limit indication
- 1 maximum and minimum safety pressure switch
- 1 reflection level indicator with shut-off valves
- 1 fail-safe minimum level safety probe
- 2 fail-safe self-controlled temperature switch units (PT100), TRD604 CAT. IV.

72 h EXEMPTION KIT
Set of accessories to obtain the partial exemption of the burner (72 h) according to L.D. 25 February 2000 no.93, MD 1 December 2004, no.329, UNI/T S 11325-3:2010.
Consisting of:
- Control panel for up to a 72h exemption, including a timer and preset for a 72h exemption reset procedure
- Instrument/safety device wood log to be mounted on the boiler flow, with all equipment required and namely:
- 1 pressure gauge with a pressure gauge valve
- 1 large dial thermometer with a limit indication
- 1 maximum and minimum safety pressure switch
- 1 reflection level indicator with shut-off valves
- 1 fail-safe minimum level safety probe
- 2 fail-safe self-controlled temperature switch units (PT100), TRD604 CAT. IV.
- 1 kit of safety accessories for the expansion vessel consisting of a minimum pressure switch and fail-safe minimum level safety probe

SÜHR’

SUPERHEATED WATER BOILER, THREE PASS REVERSE FLAME, AT MEDIUM AND HIGH PRESSURE, VERSION WITH SPECIAL TUBES - EFFICIENCY UP TO 95%							
OUTPUT RANGE	from 140 to 2900 kW						
TYPE	HP				HPO		
	BIMETALLIC pipe				HEXALOBULAR pipe		
FUEL	gas - LPG				gas - LPG - light & heavy oil		
WORKING PRESSURE	4,9 bar (SÜHR’ 5) / 9,8 bar (SÜHR’ 10)						
WORKING TEMPERATURE	158,1°C (SÜHR’ 5) / 183,2°C (SÜHR’ 10)						
MODELS	140	210	270	370	465	580	700
	1000	1160	1400	1750	2050	2300	2900

DESCRIPTION

Reversed flame superheated water boiler, special high-efficiency pipes, 92-95% efficiency [1].

SUHR’ is a family of packaged smoke tube superheated water boilers, three pass reversed flame, wet back. Standard safety pressure up to 5 bar (SÕHR’ 5) or 10 bar (SÕHR’ 10), higher pressure available on request, and output from 140 to 2900 kW. It can be operated with liquid or gaseous fuels. Every model is complete with regulations and safety accessories for automatic operation and easy commissioning.
In compliance to the current laws, each superheated boiler undergoes a conformity assessment, carried out by a Notified Body.
The conformance to the essential safety requirements demanded by the European Pressure Equipment Directive 2014/68/UE (PED) is guaranteed by the CE mark.

Design features:

By means of the reverse flame principle the smoke gases in the combustion chamber are diverted to the front, then reversed again to the smoke tube sections and discharged through the chimney connection. The appliance is designed to ensure low heating loads in the combustion chamber and low superficial loads.

- **Boiler body:** is made up of a cylindrical shell and a wet back furnace, made of high quality steel. All the materials have certificates attesting their chemical and mechanical characteristics, the controls are carried out during each production stage, and, theirs suitability for use as well. The welding seams are carried out by qualified personnel in compliance to certified procedures and are subjected to Non Destructive Tests, in accordance to an internal “Manufacturing and Control” program. Once the boilers have been manufactured they are subjected to hydraulic testing in accordance to the requirement 7.4 – Annex I, laid down in the Directive 2014/68/UE (PED).
- **Smoke tubes:** made of high quality steel, are welded to tube plates. Tubes might have high efficiency insert according boiler version.
- **Front door:** is built in welded steel plate, completely cladded internally with a layer of insulation material and with a layer of high density refractory material. The door is fitted with hinges which enable it to be easily adjusted and quickly opened. Moreover, the door is fitted with a self-cleaning sight glass for combustion control during boiler operation.
- **Rear smoke-box:** is built in welded steel plate and fixed on to the tube plate by nuts for an easy access to it. It is fitted with a small door for cleaning purposes and the horizontal flue connection (vertical on request), with a diameter sized to the boiler’s output. The rear smoke-box can be accessorized with and external economizer.
- **Basement:** is built with a steel frame, welded to the tube plates and closed with steel plates.
- **Insulation:** the shell is thermally insulated with rock wool cladding, suitably supported and covered externally in 10/10 thick enamelled aluminum.

Standard equipment: [2]

- n. 1 or 2 spring loaded safety valves (according boiler’s capacity).
- n. 1 manual draining group.
- Control board panel complete with:
  - n. 1 thermometer
  - n. 2 working thermostats
  - n. 1 safety thermostat with manual reset
  - n. 1 manometer
  - n. 1 safety pressure switch with manual reset.
- Blind burner plate
- Lifting lugs
- Document folder enclosing:
  - Manufacturer's Declaration of Conformity in compliance with the Annex VII of the European Directive 2014/68/UE (PED)
  - Installation, operation and service manuals.
  - Certificates of safety components.
  - Control board’s electric schemes and related Declaration of Conformity.
  - Water characteristics: requirements concerning the quality of water supply, the water in the boiler, frequency and type of sample tests to do.

(1) This value is intended without economizer and may change according working pressure and load conditions.
(2) The quantity and the model may vary according to the configuration.

MAIN COMPONENTS

1. Boiler body
2. Front door
3. Rear smoke chamber
4. Board panel
5. Man hole for inspection
6. Safety pressure switch
7. Manometer with 3 way cock for calibration purposes
8. Safety valves

T1. Flow
T2. Return
T3. Boiler drain
T4. Chimney connection

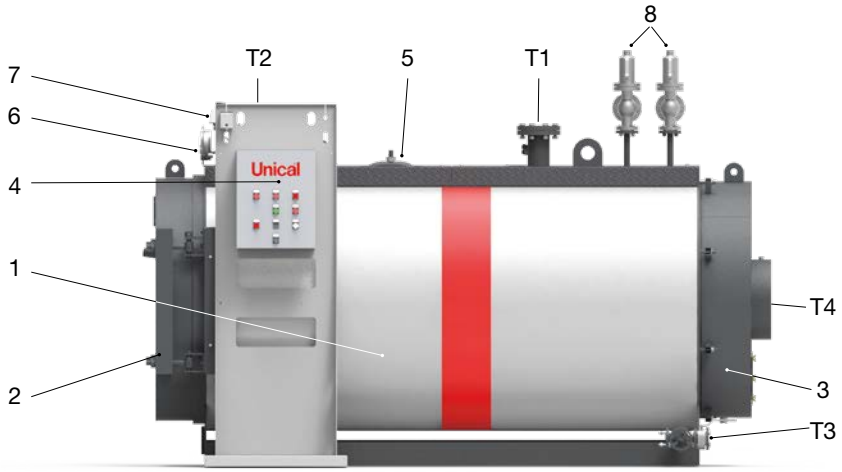

TECHNICAL DATA

Model	Nominal output	Nominal input mod. HP	Nominal input mod. HPO	ΔP smoke side	Water content	Water side pressure drop (ΔT 15°C)	Empty weight SÜHR' 5	Empty weight SÜHR' 10
	kW	kW	kW	mbar	l	mbar	kg	kg
140	140	167.4	151.4	3	335	3.7	798	963
210	210	221.1	227.0	3.75	549	8	1135	1375
270	268	282.1	289.7	4.5	549	13	1135	1375
370	372	391.6	402.2	6.3	690	11	1615	1955
465	465	489.5	502.7	6.75	690	17	1615	1955
580	581.5	612.1	628.6	7.5	1143	12	1760	2130
700	700	736.8	756.8	9	1143	18	2165	2625
1000	1000	1053.0	1081.0	10.5	1625	22	2760	3330
1160	1160	1224.2	1257.3	8.25	1625	20	2760	3330
1400	1395	1469.5	1509.2	9	1950	22	3425	4135
1750	1745	1836.8	1886.5	10.5	2575	25	5030	6070
2050	2035	2142.1	2200.0	12.3	2575	30	5030	6070
2300	2325	2447.4	2513.5	13.5	3015	40	6165	7440
2900	2900	3060.0	3412.7	14.25	4290	45	7350	8870

DIMENSIONS

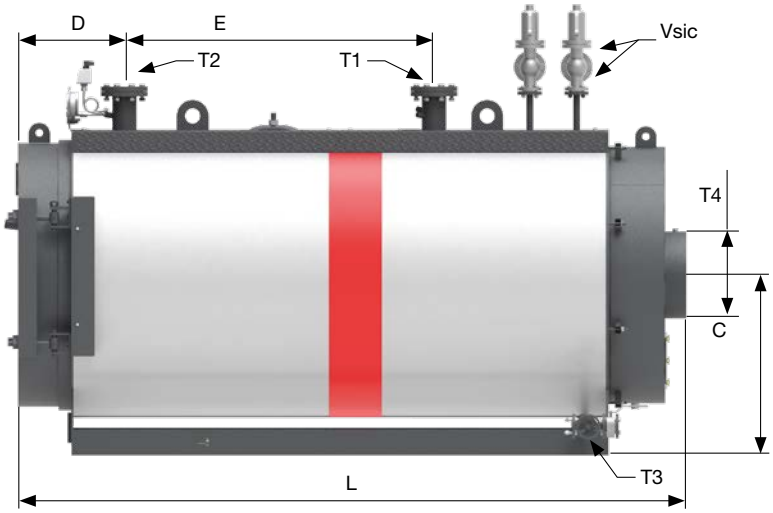

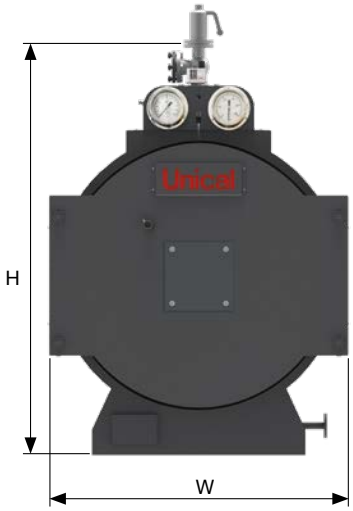

Model	W	L	H	C	D	E	T1 - T2	T3	T4	Vsic
	mm	mm	mm	mm	mm	mm	DN	DN	Øi mm	DN
140	900	1900	1230	550	200	650	65	25	202	20/32
210	1000	2125	1270	600	200	800	65	25	222	20/40
270	1000	2125	1270	600	200	800	65	25	222	20/40
370	1115	2424	1327	675	200	1010	80	25	252	20/40
465	1115	2424	1327	675	200	1010	80	25	252	20/40
580	1270	2792	1500	765	200	1140	80	25	352	20/40
700	1270	2792	1500	765	200	1140	80	25	352	20/40
1000	1400	3200	1660	865	250	1450	100	25	402	25/40
1160	1400	3200	1660	865	250	1450	100	25	402	25/40
1400	1510	3426	1770	920	300	1570	125	25	402	40/50
1750	1720	3500	2030	1075	300	1600	150	40	502	40/50
2050	1720	3500	2030	1075	300	1600	150	40	502	40/50
2300	1800	3875	2120	1115	300	1700	200	40	552	40/50
2900	1980	4195	2290	1205	300	1850	200	40	602	40/65

PRODUCT PLUS VALUES

- **FRONT DOOR**
  Fitted on hinges, with reversible opening. It is in welded steel sheet, with the inside completely insulated with refractory concrete. Complete with burner plate and flame sight glass
- **REAR SMOKE CHAMBER**
  Made of steel sheet and complete of horizontal chimney connection (vertical on request) and cleaning openings
- **BASEMENT**
  In steel profiles
- **THERMAL INSULATION**
  Made of a mineral wool mattress, externally protected by painted aluminum panels
- **DELIVERY**
  Is complete with board panel "FLAT_SH", safety and control devices

TYPE OF PIPES

BIMETALLIC PIPE (HP)
an aluminium multiradial profile, bound by rolling, is inserted within the steel pipes in order to increase the exchange surface and efficiency.

BREVETTO Unical PATENT

HEXALOBULAR PIPE (HPO)
a steel profile with a hexalobular section, bound by rolling, is inserted within the smoke pipes, in order to increase the exchange surface and efficiency.

BREVETTO Unical PATENT

BOARD PANELS (optional)

IMC_SH

- Single and two-stage burner control
- Possible 24/72 h exemption
- No. 1 low level safety PED level switch (optional)
- Terminal board on quick coupling connectors
- Expansion with optional kits
- IP55 Protection rating

IML_SH

- Control PLC
- 7" touch screen display with graphic interface
- Single and two-stage, three-stage, modulating burner control
- Possible 24/72 h exemption
- No. 1 low level safety PED level switch (optional)
- Terminal board on quick coupling connectors
- Expansion with optional kits
- IP55 Protection rating

OPTIONAL EQUIPMENT

24 h EXEMPTION KIT
Set of accessories to obtain the partial exemption of the burner (24 h) according to L.D. 25 February 2000 no.93, MD 1 December 2004, no.329, UNI/T S 11325-3:2010.
Consisting of:
- 24h exemption control panel including a timer and preset for a 24h exemption reset procedure
- Instrument/safety device wood log to be mounted on the boiler flow, with all equipment required and namely:
- 1 pressure gauge with a pressure gauge valve
- 1 large dial thermometer with a limit indication
- 1 maximum and minimum safety pressure switch
- 1 reflection level indicator with shut-off valves
- 1 fail-safe minimum level safety probe
- 2 fail-safe self-controlled temperature switch units (PT100), TRD604 CAT. IV.

72 h EXEMPTION KIT
Set of accessories to obtain the partial exemption of the burner (72 h) according to L.D. 25 February 2000 no.93, MD 1 December 2004, no.329, UNI/T S 11325-3:2010.
Consisting of:
- Control panel for up to a 72h exemption, including a timer and preset for a 72h exemption reset procedure
- Instrument/safety device wood log to be mounted on the boiler flow, with all equipment required and namely:
- 1 pressure gauge with a pressure gauge valve
- 1 large dial thermometer with a limit indication
- 1 maximum and minimum safety pressure switch
- 1 reflection level indicator with shut-off valves
- 1 fail-safe minimum level safety probe
- 2 fail-safe self-controlled temperature switch units (PT100), TRD604 CAT. IV.
- 1 kit of safety accessories for the expansion vessel consisting of a minimum pressure switch and fail-safe minimum level safety probe

TRYSÕHR’

HIGH PRESSURE PACKAGED SUPERHEATED BOILER, GENUINE THREE PASS FIRE TUBE, HIGH PERFORMANCES, 91% EFFICIENCY							
OUTPUT RANGE	from 870 to 10000 kW						
WORKING PRESSURE	9.8 bar (higher pressure on request)						
WORKING TEMPERATURE	183,2°C						
MODELS	870	1160	1400	1800	2300	2900	3500
	4000	4650	5800	7000	8300	10000	-

DESCRIPTION

High pressure packaged superheated boiler, genuine three-pass fire tube, horizontal, 91% efficiency [1].

TRYSUHR' is a family of packaged smoke tube superheated boilers, genuine three-pass, and wet back. Standard safety pressure up to 10 bar (higher pressure available on request) and output from 870 to 10000 kW. It can be operated with liquid or gaseous fuels. Every model is complete with regulations and safety accessories for automatic operation and easy commissioning.
In compliance to the current laws, each superheated boiler undergoes a conformity assessment, carried out by a Notified Body.
The conformance to the essential safety requirements demanded by the European Pressure Equipment Directive 2014/68/UE (PED) is guaranteed by the CE mark.

Design features:

By means of the three-pass design the smoke gases in the combustion chamber are diverted to the front through the first set of fire tubes by the reversing chamber; then reversed again by the frontal smoke box to the second smoke tube sections and discharged through the chimney connection. The appliance is designed to ensure low heating loads in the combustion chamber, low superficial loads and low NOx emissions (with Low NOx burners).

- **Boiler body:** is made of a cylindrical shell and a wet back furnace, dished and butt welded tube plates, made of high quality steel. All the materials have certificates attesting their chemical and mechanical characteristics, the controls are carried out during each production stage, and, theirs suitability for use as well. The welding seams are carried out by qualified personnel in compliance to certified procedures and are subjected to Non Destructive Tests, in accordance to an internal "Manufacturing and Control" program. Once the boilers have been manufactured they are subjected to hydraulic testing in accordance to the requirement 7.4 – Annex I, laid down in the Directive 2014/68/UE (PED).
- **Smoke tubes:** made of high quality steel, are welded to tube plates, and are without helical turbulators.
- **Reversing chamber:** is built in welded steel plate, completely water-cooled, and connected to the rear smoke-box with supports and manhole.
- **Front door:** is built in welded steel plate, completely cladded internally with a layer of insulation material and with a layer of high density refractory material. One or two doors are present according the boiler's capacity, for cleaning and inspection. Close to the burner hole is present a self-cleaning sight glass for combustion control during boiler operation.
- **Rear smoke-box:** is built in welded steel plate, completely cladded internally with a layer of insulation material and with a layer of high density refractory material. Two doors for cleaning and inspection are fitted with hinges to be quickly opened. Complete with an horizontal chimney connection with a diameter sized to the boiler's output, and a self-cleaning sight glass for combustion control. The rear smoke-box can be accessorized with and external economizer.
- **Basement:** is built with a steel frame, welded to the tube plates and closed with steel plates.
- **Walkway:** positioned on the top part of the boiler, is made of steel, covered with chequered plate and completed; on request with handrail and access ladder.
- **Insulation:** the shell is thermally insulated with a 100 mm rock wool cladding binded with high density, thick thermosetting resins, suitably supported and covered externally in 10/10 thick enamelled aluminum.

Standard equipment: [2]

- Control board panel complete with:
  - n. 2 spring loaded safety valves.
  - n. 1 manual draining group.
  - n. 1 large dial thermometer.
  - n. 1 large manometer with 3 way cock for calibration.
  - n. 2 working thermostats.
  - n. 1 safety pressure switch with manual reset onto the board panel, CE PED certified.
  - n. 1 safety thermostat with manual reset, CE PED certified.
- Blind burner plate.
- Lifting lugs.
- Document folder enclosing:
  - Manufacturer's Declaration of Conformity in compliance with the Annex VII of the European Directive 2014/68/UE (PED)
  - Installation, operation and service manuals.
  - Certificates of safety components.
  - Control board's electric schemes and related Declaration of Conformity.
  - Water characteristics: requirements concerning the quality of water supply, the water in the boiler, frequency and type of sample tests to do.

(1) This value may change according working pressure and load conditions.
(2) The quantity and the model may vary according to the configuration.

MAIN COMPONENTS

1. Boiler body
2. Front door
3. Rear smoke chamber
4. Board panel
5. Inspection with man hole
6. Safety devices kit
7. Safety valves

T1. Flow
T2. Return
T3. Boiler drain
T4. Chimney connection

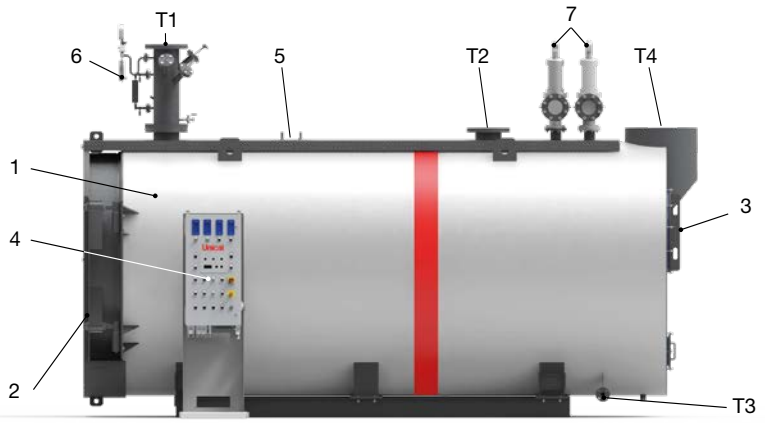

TECHNICAL DATA

Model	Nominal output	Nominal input	ΔP smoke side	Water content	Burner plate drilling	Burner head tube Min/max length	Empty weight
	kW	kW	mbar	l	mm	mm	kg
870	870	960	3.0	2800	According to burner manufacturer	According to burner manufacturer	4150
1160	1160	1280	5.6	2870			6100
1400	1395	1550	6.7	3600			6800
1800	1750	1940	5.4	4950			7400
2300	2300	2550	3.5	5850			9200
2900	2900	3220	6.0	6545			11000
3500	3500	3880	7.5	8200			12300
4000	4000	4440	7.2	9175			13000
4650	4650	5160	7.0	11000			15000
5800	5800	6440	5.8	12520			17600
7000	7000	7740	10.0	14700			19200
8300	8300	9220	10.0	16800			22000
10000	10000	11100	11.0	20100			26000

DIMENSIONS

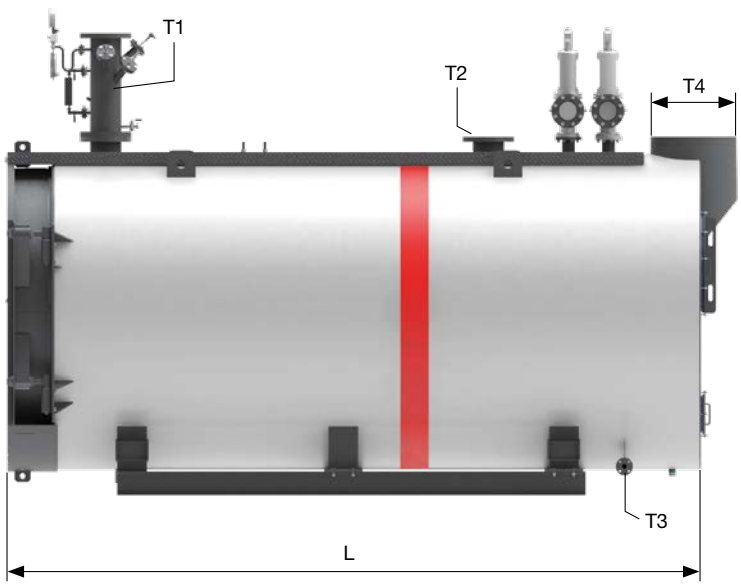

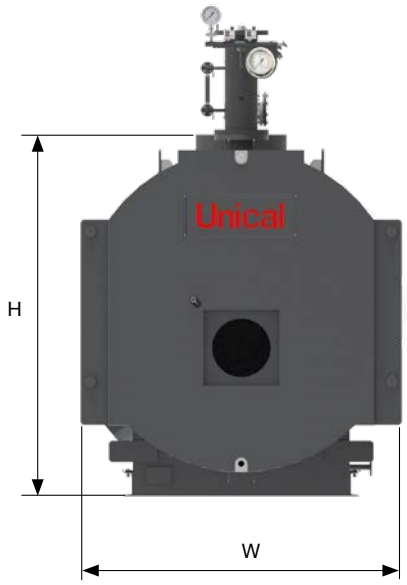

Model	W	L	H	T1/T2	T3	T4
	mm	mm	mm	DN	DN	Øi mm
870	1480	3500	1800	100	25	302
1160	1660	3600	2150	125	25	352
1400	1800	3700	2150	150	40	352
1800	2130	3885	2400	150	40	402
2300	2180	4270	2450	150	40	452
2900	2255	4520	2535	200	40	452
3500	2425	5080	2795	200	40	552
4000	2425	5320	2795	200	40	602
4650	2520	5770	2890	200	40	602
5800	2670	6370	3000	250	40	702
7000	2670	6870	3000	250	40	702
8300	2830	7320	3210	250	40	802
10000	3030	7590	3345	300	40	902

PRODUCT PLUS VALUES

- **FRONT AND REAR DOOR**
  placed on both sides to get access to the tube bundles. They can be opened without the removal of the burner and the chimney for an easy service
- **LOW EMISSIONS NO_x < 70 mg/kWh**
  thanks to the reduction of the specific thermal load (according to the versions)
- **WET BACK FURNACE**
- **POSSIBLE COMBINATION**
  with one /two stage or modulating burners, operated with natural gas, LPG, light oil or heavy oil
- **EASY TRANSPORTATION**
  thanks to the upper hooks and the strong frame side members
- **DELIVERY**
  Is complete with board panel "FLAT_SH", safety and control devices

STANDARD-PRODUCTION EQUIPMENT

- Rock wool insulation covered with an aluminium foil
- Board panel for two stage operation burner
- N. 2 spring actuated safety valves
- Draining group with quick lever operated desludging valve
- N. 1 dial type thermometer
- N. 1 dial type manometer with 3 way cock for calibration purposes
- N. 2 working thermostats
- N. 1 manual reset safety pressure switch

BOARD PANELS (optional)

IMC_SH

- Single and two-stage burner control
- Possible 24/72 h exemption
- No. 1 low level safety PED level switch (optional)
- Terminal board on quick coupling connectors
- Expansion with optional kits
- IP55 Protection rating

IML_SH

- Control PLC
- 7" touch screen display with graphic interface
- Single and two-stage, three-stage, modulating burner control
- Possible 24/72 h exemption
- No. 1 low level safety PED level switch (optional)
- Terminal board on quick coupling connectors
- Expansion with optional kits
- IP55 Protection rating

OPTIONAL EQUIPMENT

24 h EXEMPTION KIT
Set of accessories to obtain the partial exemption of the burner (24 h) according to L.D. 25 February 2000 no.93, MD 1 December 2004, no.329, UNI/T S 11325-3:2010.
Consisting of:
- 24h exemption control panel including a timer and preset for a 24h exemption reset procedure
- Instrument/safety device wood log to be mounted on the boiler flow, with all equipment required and namely:
- 1 pressure gauge with a pressure gauge valve
- 1 large dial thermometer with a limit indication
- 1 maximum and minimum safety pressure switch
- 1 reflection level indicator with shut-off valves
- 1 fail-safe minimum level safety probe
- 2 fail-safe self-controlled temperature switch units (PT100), TRD604 CAT. IV.

72 h EXEMPTION KIT
Set of accessories to obtain the partial exemption of the burner (72 h) according to L.D. 25 February 2000 no.93, MD 1 December 2004, no.329, UNI/T S 11325-3:2010.
Consisting of:
- Control panel for up to a 72h exemption, including a timer and preset for a 72h exemption reset procedure
- Instrument/safety device wood log to be mounted on the boiler flow, with all equipment required and namely:
- 1 pressure gauge with a pressure gauge valve
- 1 large dial thermometer with a limit indication
- 1 maximum and minimum safety pressure switch
- 1 reflection level indicator with shut-off valves
- 1 fail-safe minimum level safety probe
- 2 fail-safe self-controlled temperature switch units (PT100), TRD604 CAT. IV.
- 1 kit of safety accessories for the expansion vessel consisting of a minimum pressure switch and fail-safe minimum level safety probe

V_SÜHR’

EXPANSION TANK IN CARBON STEEL FOR OVERHEATED WATER SYSTEMS				
RANGE	from 500 to 5000 liters			
EXECUTION	vertical (horizontal on request)			
WORKING PRESSURE	5 bar (V_SÜHR’ 5) / 10 bar (V_SÜHR’ 10)			
MAX. WORKING TEMPERATURE	158,1°C (V_SÜHR’ 5) / 183,2°C (V_SÜHR’ 10)			
MODELS	500	1000	1500	2000
	2500	3000	4000	5000

DESCRIPTION

Expansion tank for overheated water installations.

Cylindric vertical execution. Equipped with steel basement, which permits the ground installation or installation on adequate support.

Safety valve for gaseous fluid of vessel loading: air or nitrogen. Designed for a max. flow rate of gaseous fluid, at the inlet from the PRV, of 200 m³/h

Equipment on demand for combination with boilers exempt from continuous surveillance

Standard equipment:

- n. 1 expansion tank in carbon steel
- n. 1 safety valve
- n. 1 magnetic level indicator with level control switch
- n. 3 pressure switches:
  2 nitrogen load / exhaust + 1 max . pressure
- n. 2 nitrogen loading / discharge valves
- n. 1 manometer + tap
- n. 1 drain valve
- n. 1 minimum pressure switch
- n. 1 fail safe minimum level probe
- n. 1 electric panel board

DIMENSIONS

Model	W	H	Ø vs
	mm	mm	DN/in
500	650	1900	1"1/2
1000	800	2480	2"
1500	950	2560	2"1/2
2000	1100	2620	2”1/2
2500	1400	2080	2”1/2
3000	1250	2950	3"
4000	1400	3030	3”
5000	1450	3570	3”

EL7

INSTANTANEOUS ELECTRIC STEAM GENERATOR					
OUTPUT RANGE	from 16 kW (20 kg/h) to 180 kW (250 kg/h)				
WORKING PRESSURE	4.5 bar (on request up to 8.5 bar)				
WORKING TEMPERATURE	170°C				
MODELS	20	30	80	160	250

DESCRIPTION

Electric steam generator, 99% efficiency [1].

EL7 is an instantaneous electric steam generator. Designed for a working pressure of 4.5 bar (8.5 bar upon request) and a steam production from 20 up to 250 kg/h (15 – 180 kW). The conformance to the essential safety requirements demanded by the European Pressure Equipment Directive 2014/68/UE (PED) is guaranteed by the CE mark.

Design features:

The steam generator is composed of one or more pressure vessels having a variable number of electric resistors on board. Such configuration allows the generator to modulate the steam production and the absorbed power.

Installation of the generator is as quick as easy because only 4 connections are necessary: electric power supply, steam supply, drain and water inlet. Water feed can be connected directly to the water mains or to a condensate tank. The control panel manages automatically the steam generator and has an intuitive operational. Because of the vertical design, the EL7 has a very small footprint.

Standard equipment: [2]

- Steam main valve.
- n. 1 safety valve
- n. 1 reflecting level indicator with cut-off cocks
- n. 1 pressure gauge
- n. 1 safety pressure switch
- n. 1 safety thermostat
- n. 1 water automatic level regulation
- n. 1 feeding group complete with 1 pump
- Valve assembly for feeding circuit, with relevant pipes already fitted
- n. 1 manual bottom blowdown valve
- Control panel board 230/400 V – 3 phases – 50/60 Hz
- Document folder enclosing:
  - Manufacturer's Declaration of Conformity
  - Installation, operation and service manuals
  - Certificates of safety components
  - Control board's electric schemes and related Declaration of Conformity
  - Water characteristics: requirements concerning the quality of water supply, the water in the boiler, frequency and type of sample tests to do.

(1) This value is intended without economizer and may change according working pressure and load conditions.
(2) The quantity and the model may vary according to the configuration.

TECHNICAL DATA

Model	Steam production	Power input	Standard Working pressure	Optional Working pressure *	Water content
	kg/h	kW	bar	bar	l
20	20	15	4.5	7	16
30	30	22	4.5	7	24
80	83	60	4.5	8.5	55
160	166	120	4.5	8.5	2 x 55
250	249	180	4.5	8.5	3 x 55

* higher working pressure available on request

DIMENSIONS

Model	W	L	H	Feed water	Blow down	Steam connection	Condensate return	Empty weight
	mm	mm	mm					kg
20	550	440	980	3/8"	1/2"	1/2"	1/2"	72
30	580	660	730	1/2"	1/2"	1/2"	1/2"	85
80	830	830	570	1/2"	1/2"	1/2"	1/2"	114
160	830	830	1395	1/2"	1/2"	1/2"	1/2"	237
250	1160	950	1670	1/2"	1/2"	1/2"	1/2"	325

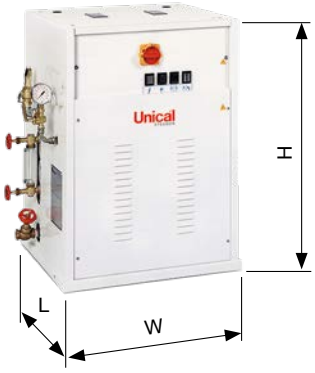

BAHR'UNO OR

LOW PRESSURE STEAM BOILER, THREE PASS REVERSE FLAME EFFICIENCY UP TO 91%									
OUTPUT RANGE	from 69.8 kW (100 kg/h) to 2683 kW (4000 kg/h)								
TYPE	OR								
	smooth pipe								
FUEL	gas, light & heavy oil								
DESIGN PRESSURE	0,98 bar								
DESIGN TEMPERATURE	119,6°C								
MODELS	100	140	160	200	300	400	500	600	800
	1000	1250	1500	1750	2000	2500	3000	3500	4000

DESCRIPTION

Low pressure steam boiler, three pass reverse flame, smooth pipes with turbulators, 91% efficiency [1].

BAHR'UNO OR is a family of packaged smoke tube steam boilers, three pass reversed flame, wet back. Standard safety pressure up to 0.98 bar and output from 100 to 4000 kg/h. It can be operated with liquid or gaseous fuels. Every model is complete with regulations and safety accessories for automatic operation and easy commissioning. In compliance to the current laws, each steam boiler undergoes a conformity assessment, carried out by a Notified Body. The conformance to the essential safety requirements demanded by the European Pressure Equipment Directive 2014/68/UE (PED) is guaranteed by the CE mark.

Design features:

By means of the reverse flame principle the smoke gases in the combustion chamber are diverted to the front, then reversed again to the smoke tube sections and discharged through the chimney connection. The appliance is designed to ensure low heating loads in the combustion chamber and low superficial loads.

- **Boiler body:** is made up of a cylindrical shell and a wet back furnace, made of high quality steel. All the materials have certificates attesting their chemical and mechanical characteristics, the controls are carried out during each production stage, and, theirs suitability for use as well. The welding seams are carried out by qualified personnel in compliance to certified procedures and are subjected to Non Destructive Tests, in accordance to an internal "Manufacturing and Control" program. Once the boilers have been manufactured they are subjected to hydraulic testing in accordance to the requirement 7.4 – Annex I, laid down in the Directive 2014/68/UE (PED).
- **Smoke tubes:** made of high quality steel, are welded to tube plates. Pipes are equipped with helical turbulators.
- **Front door:** is built in welded steel plate, completely cladded internally with a layer of insulation material and with a layer of high density refractory material. The door is fitted with hinges which enable it to be easily adjusted and quickly opened. Moreover, the door is fitted with a self-cleaning sight glass for combustion control during boiler operation.
- **Rear smoke-box:** is built in welded steel plate and fixed on to the tube plate by nuts for an easy access to it. It is fitted with a small door for cleaning purposes and the horizontal flue connection (vertical on request), with a diameter sized to the boiler's output. The rear smoke-box can be accessorized with and external economizer.
- **Basement:** is built with a steel frame, welded to the tube plates and closed with steel plates.
- **Walkway:** positioned on the top part of the boiler, is made of steel, covered with chequered plate and completed; on request with handrail and access ladder.
- **Insulation:** the shell is thermally insulated with a 100 mm rock wool cladding binded with high density, thick thermosetting resins, suitably supported and covered externally in 10/10 thick enamelled aluminum.

Standard equipment: [2]

- Steam main globe valve.
- n. 2 spring loaded safety valves.
- n. 2 reflecting level indicators, with flanged connections, purging and cut-off cocks.
- Control board panel IP55 400V - 3+N - 50Hz complete with:
  - n. 1 large manometer with 3 way cock for manometer calibration.
  - n. 1 safety pressure switch with manual reset onto the board panel, CE PED certified.
  - n. 1 limit working pressure switch.
  - n. 1 regulation pressure switch for two stages burners or probe for modulating burners.
- n. 2 safety minimum level switches, with manual reset CE certified.
- n. 2 water level probes for ON-OFF pump regulation.
- Feeding group complete with 2 centrifugal pumps.
- Valve assembly for feeding circuit, with relevant pipes already fitted.
- Automatic group for level control.
- n. 1 manual bottom blowdown valve.
- Man-hole on top and hand-hole on water side.
- Integral steam drier for high steam quality.
- Blind burner plate.
- Carbon steel turbulators.
- Lifting lugs.
- Document folder enclosing:
  - Manufacturer's Declaration of Conformity in compliance with the Annex VII of the European Directive 2014/68/UE (PED)
  - Installation, operation and service manuals.
  - Certificates of safety components.
  - Control board's electric schemes and related Declaration of Conformity.
  - Water characteristics: requirements concerning the quality of water supply, the water in the boiler, frequency and type of sample tests to do.

Options:
- Spring actuated safety valve
- Kit of "Second boiler water feeding pump"
- Kit of "maximum safety level"
- Kit TDS (Total Dissolved Salts)
- Kit of "Automatic de-sludging" (Blow down)
- Kit of "72 hr exemption" for standard steam boiler
  Supplied with electronic board panel Unical, model IML (Industrial Multi Logic) or IMC
- Pre-drilled burner plate
- Oil or gas fired burner

(1) This value is intended without economizer and may change according working pressure and load conditions.
(2) The quantity and the model may vary according to the configuration.

MAIN COMPONENTS

1. Boiler body
2. Front door
3. Board Panel
4. Instruments assembly
5. Steam valve
6. Safety valve
7. Rear smoke chamber
8. Drain
9. Pump feeding group
10. TDS connection
11. Level gauge

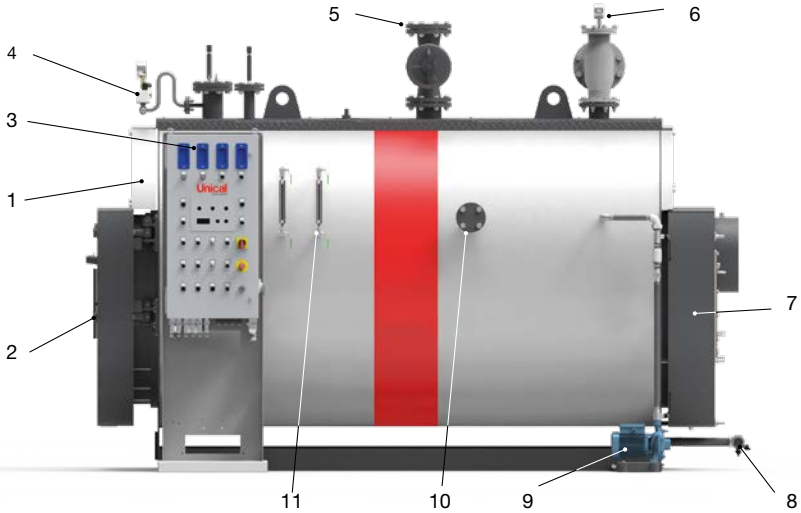

TECHNICAL DATA

Model	Steam production	Nominal output *	Nominal input OR **	ΔP smoke side	Max. working pressure	Water content at level	Total volume	Burner head min. length	Burner head max. dia.
	kg/h	kW	kW	mbar	bar	l	l	mm	mm
100	100	69.8	77.6	1.6	0.98	204	230	240	180
140	140	94	104.4	2.0	0.98	310	410	340	210
160	160	107	118.9	2.3	0.98	310	410	340	210
200	200	134	148.9	2.6	0.98	310	410	340	210
300	300	201	223.3	2.2	0.98	568	730	340	210
400	400	268	297.8	2.6	0.98	568	730	340	210
500	500	335	372.2	2.8	0.98	814	1040	340	240
600	600	402	446.7	3.5	0.98	814	1040	340	240
800	800	537	596.7	3.8	0.98	1160	1545	380	240
1000	1000	671	745.6	4.2	0.98	1160	1545	380	240
1250	1250	838	931.1	4.5	0.98	1663	2250	400	280
1500	1500	1006	1117.8	5.1	0.98	1663	2250	400	280
1750	1750	1174	1304.4	5.5	0.98	2140	2890	420	280
2000	2000	1341	1490.0	6.0	0.98	2140	2890	420	280
2500	2500	1677	1863.3	6.8	0.98	2970	4060	420	360
3000	3000	2012	2235.6	7.0	0.98	2970	4060	420	360
3500	3500	2347	2607.8	7.6	0.98	3490	4770	450	400
4000	4000	2683	2981.1	8.6	0.98	4155	5780	450	400

* with feeding water temperature = 70°C and pressure = 1 bar ** According working pressure and load conditions

PRODUCT PLUS VALUES

- **EFFICIENT THERMAL INSULATION**
  given by:
  - high total thickness, made by joining two rock wool
  - layers with aluminium foil
  - insulation between the casing and the hot parts of the boiler body for thermal bridges elimination
- **REVERSIBLE DOOR OPENING**
  hinges and closing bolts adjustment in all directions
- **PLATFORM**
  in checker plate, placed in the upper part
- **SIMPLIFIED ELECTRICAL CONNECTION**
  via fast coupling connectors
- **BOARD PANELS**
  electromechanical and electronic, expandable (optional)
- **POSSIBLE COMBINATION**
  with one, two, three stage or modulating burners
- **IMPLEMENTABLE FUNCTIONS**
  boiler and board panel designed for the integration of optional kits, also with boiler already installed
- **SMOOTH PIPES**
  The smooth smoke pipes, suitable for gas, light and heavy oil operation, constituting the tube bundle, increase the thermal exchange and allow the removal of the residual combustion products. They are formed by pipes with, inside, helical turbulators. They are standard supplied for gas, light and heavy oil operation.

TYPE OF PIPES

SMOOTH PIPES

The smooth smoke pipes, suitable for gas, light and heavy oil operation, constituting the tube bundle, increase the thermal exchange and allow the removal of the residual combustion products.
They are formed by pipes with, inside, helical turbulators.
They are standard supplied for gas, light and heavy oil operation.

Efficiency up to 91%.
In function of working pressure of the boiler.

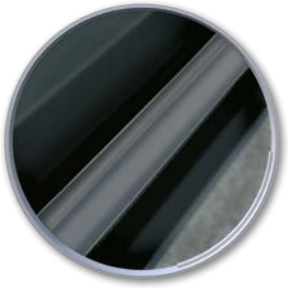

DIMENSIONS

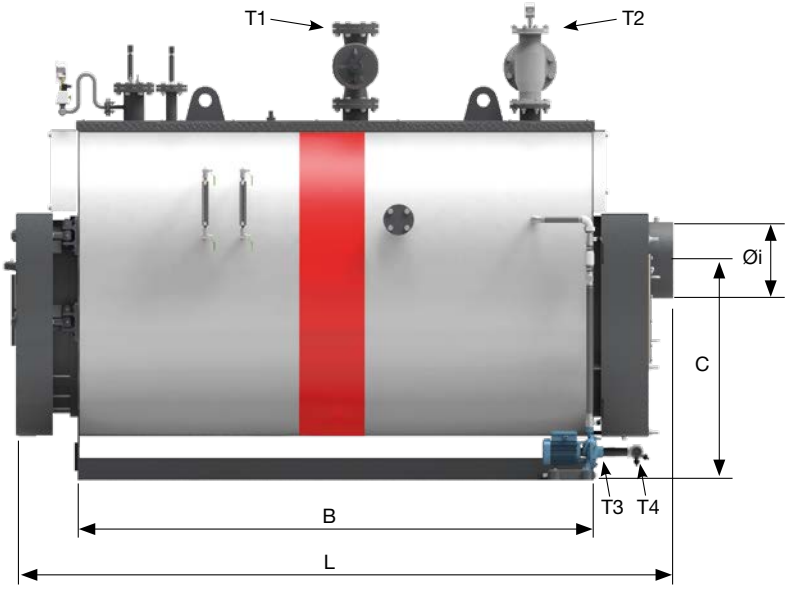

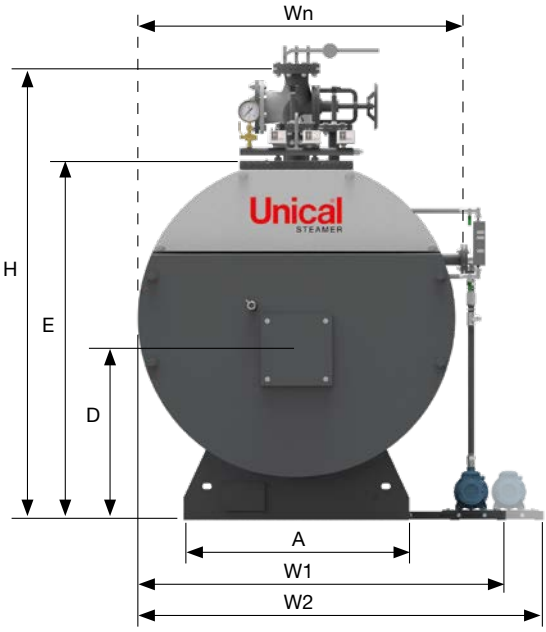

Model	Wn	W1	W2	L	H	A	B	C	D	E	Øi	T1	T2	T3	T4	Empty weight	Total weight.
	mm	mm	mm	mm	mm	mm	mm	mm	mm	mm	mm					kg	kg
100	1100	1307	-	1491	1377	950	880	-	460	971	182	1 1/4"	DN 40	1"	1"	685	889
140	1126	1370	1629	1865	1485	720	1100	725	580	1220	212	DN 50	DN 50	1"	1/2"	1030	1340
160	1126	1370	1629	1865	1485	720	1100	725	580	1220	212	DN 50	DN 50	1"	1/2"	1030	1340
200	1126	1370	1629	1865	1485	720	1100	725	580	1220	212	DN 50	DN 50	1"	1/2"	1030	1340
300	1225	1417	1687	2315	1630	780	1550	815	635	1340	212	DN 65	DN 65	1"	1"	1330	1898
400	1225	1417	1687	2315	1630	780	1550	815	635	1340	212	DN 65	DN 65	1"	1"	1330	1898
500	1342	1543	1813	2515	1800	860	1750	880	685	1460	252	DN 80	DN 80	1"	1"	1630	2444
600	1342	1543	1813	2515	1800	860	1750	880	685	1460	252	DN 80	DN 80	1"	1"	1630	2444
800	1495	1670	1945	2885	1980	950	2120	945	745	1600	352	DN 100	DN 100	1"	1"	2130	3290
1000	1495	1670	1945	2885	1980	950	2120	945	745	1600	352	DN 100	DN 100	1"	1"	2130	3290
1250	1628	1804	2061	3322	2220	1090	2527	1075	860	1790	402	DN 125	DN 125	1"	1"	2740	4403
1500	1628	1804	2061	3322	2220	1090	2527	1075	860	1790	402	DN 125	DN 125	1"	1"	2740	4403
1750	1756	1934	2215	3545	2350	1200	2750	1170	905	1920	402	DN 125	DN 150	1"	1 1/2"	3360	5500
2000	1756	1934	2215	3545	2350	1200	2750	1170	905	1920	402	DN 125	DN 150	1"	1 1/2"	3360	5500
2500	2030	2100	2386	3625	2725	1470	2830	1410	1080	2250	502	DN 150	DN 100 (2x)	1"	1 1/2"	4650	7620
3000	2030	2100	2386	3625	2725	1470	2830	1410	1080	2250	502	DN 150	DN 100 (2x)	1"	1 1/2"	4650	7620
3500	2030	2100	2386	3950	2725	1470	3330	1410	1080	2250	502	DN 150	DN 100 (2x)	1"	1 1/2"	5400	8890
4000	2300	2400	2680	4260	3192	1700	3430	1650	1165	2473	502	DN 200	DN 150 (2x)	1 1/2"	1 1/2"	5900	10055

BAHR'UNO

LOW PRESSURE STEAM BOILER, THREE PASS REVERSE FLAME EFFICIENCY UP TO 97%									
OUTPUT RANGE	from 94 kW (140 kg/h) to 2683 kW (4000 kg/h)								
TYPE	STD			HPO			HP		
	smooth pipe			ESA pipe			ESALU pipe		
FUEL	gas, light & heavy oil			gas, light oil			gas		
DESIGN PRESSURE	0,98 bar								
DESIGN TEMPERATURE	119,6°C								
MODELS	140	160	200	300	400	500	600	800	1000
	1250	1500	1750	2000	2500	3000	3500	4000	-

DESCRIPTION

Low pressure steam boiler, three pass reverse flame, with efficiency from 91% up to 97%[1] according the installed smoke tube (STD, HPO, HP).

BAHR'UNO is a family of packaged smoke tube steam boilers, three pass reverse flame, wet back. Standard safety pressure up to 0.98 bar and output from 140 to 4000 kg/h. It can be operated with liquid or gaseous fuels. Every model is complete with regulations and safety accessories for automatic operation and easy commissioning.
In compliance to the current laws, each steam boiler undergoes a conformity assessment, carried out by a Notified Body. The conformance to the essential safety requirements demanded by the European Pressure Equipment Directive 2014/68/UE (PED) is guaranteed by the CE mark.

Design features:

By means of the reverse flame principle the smoke gases in the combustion chamber are diverted to the front, then reversed again to the smoke tube sections and discharged through the chimney connection. The appliance is designed to ensure low heating loads in the combustion chamber and low superficial loads.

- **Boiler body:** is made up of a cylindrical shell and a wet back furnace, made of high quality steel. All the materials have certificates attesting their chemical and mechanical characteristics, the controls are carried out during each production stage, and, theirs suitability for use as well. The welding seams are carried out by qualified personnel in compliance to certified procedures and are subjected to Non Destructive Tests, in accordance to an internal "Manufacturing and Control" program. Once the boilers have been manufactured they are subjected to hydraulic testing in accordance to the requirement 7.4 – Annex I, laid down in the Directive 2014/68/UE (PED).
- **Smoke tubes:** made of high quality steel, are welded to tube plates. Pipes are equipped with steel turbulators or fitted with aluminum and/or steel inserts according the installed smoke tube.
- **Front door:** is built in welded steel plate, completely cladded internally with a layer of insulation material and with a layer of high density refractory material. The door is fitted with hinges which enable it to be easily adjusted and quickly opened. Moreover, the door is fitted with a self-cleaning sight glass for combustion control during boiler operation.
- **Rear smoke-box:** is built in welded steel plate and fixed on to the tube plate by nuts for an easy access to it. It is fitted with a small door for cleaning purposes and the horizontal flue connection (vertical on request), with a diameter sized to the boiler's output. The rear smoke-box is pre-arranged for the installation of an integral economizer.
- **Basement:** is built with a steel frame, welded to the tube plates and closed with steel plates.
- **Walkway:** positioned on the top part of the boiler, is made of steel, covered with chequered plate and completed; on request with handrail and access ladder.
- **Insulation:** the shell is thermally insulated with a 100 mm rock wool cladding binded with high density, thick thermosetting resins, suitably supported and covered externally in 10/10 thick enamelled aluminum. The frontal parts of the boiler are also insulated with rock wool and covered externally with a metallic box.

Standard equipment: [2]

- 1 steam main globe valve.
- 1 lever weighted safety valve [3]
- 2 reflecting level indicators, with flanged connections, purging and cut-off cocks.
- Control board panel IP55 400V - 3+N - 50Hz complete with:
  - 1 large manometer with 3 way cock for manometer calibration.
  - 1 safety pressure switch with manual reset onto the board panel, CE PED certified.
  - 1 limit working pressure switch.
  - 1 regulation pressure switch for two stages burners or probe for modulating burners.
  - 2 safety minimum level switches, with manual reset CE certified.
  - 2 water level probes for ON-OFF pump regulation.
- Feeding group complete with 2 centrifugal pumps.
- Valve assembly for feeding circuit, with relevant pipes already fitted.
- Automatic group for level control.
- 1 manual bottom blowdown valve.
- Man-hole on top and hand-hole on water side.
- Integral steam drier for high steam quality.
- Blind burner plate.
- Turbulators (STD version) or special high efficiency pipes fitted with inserts (HPO, HP versions).
- Lifting lugs.
- Document folder enclosing:
  - Manufacturer's Declaration of Conformity in compliance with the Annex VII of the European Directive 2014/68/UE (PED)
  - Installation, operation and service manuals.
  - Certificates of safety components.
  - Control board's electric schemes and related Declaration of Conformity.
  - Water characteristics: requirements concerning the quality of water supply, the water in the boiler, frequency and type of sample tests to do.

Options:

- Spring actuated safety valve
- Kit of "Second boiler water feeding pump"
- Kit of "maximum safety level"
- Kit TDS (Total Dissolved Salts)
- Kit of "Automatic de-sludging" (Blow down)
- Kit of "72 hr exemption" for standard steam boiler *
- Pre-drilled burner plate
- Oil or gas fired burner

* Supplied with electronic board panel Unical, model IML (Industrial Multi Logic) or IMC

Special versions

BAHR'UNO 24 hr / 72 hr

- Equipped with either "IML" or "IMC board panel" and "Kit 72 hr" to obtain:
  - the certification for operation "without continuous surveillance" for model until 2000 kg/h
  - the certification for operation "without continuous surveillance" up to a maximum of 72 hr for model over 2000 kg/h.

EC / HPOEC / HPEC versions

- To increase more the already high steam boiler efficiency, without influencing the dimensions the boilers are already preset to fit, on request (in the factory or later, on the field), the economizer Kit EC, which is specific for each model and is available for both, gas and oil versions.

(1) This value is intended with economizer and may change according working pressure and load conditions.
(2) The quantity and the model may vary according to the configuration.
(3) 2 safety valves for the models over 2000 kg/h. On the request spring operated safety valves.

MAIN COMPONENTS

1. Boiler body
2. Front door
3. Board panel
4. Instruments assembly
5. Level safety sensors
6. Capacitive level transmitter
7. Steam valve
8. Safety valve
9. Rear smoke chamber
10. Drain
11. Pump feeding group
12. TDS connection
13. Level gauge

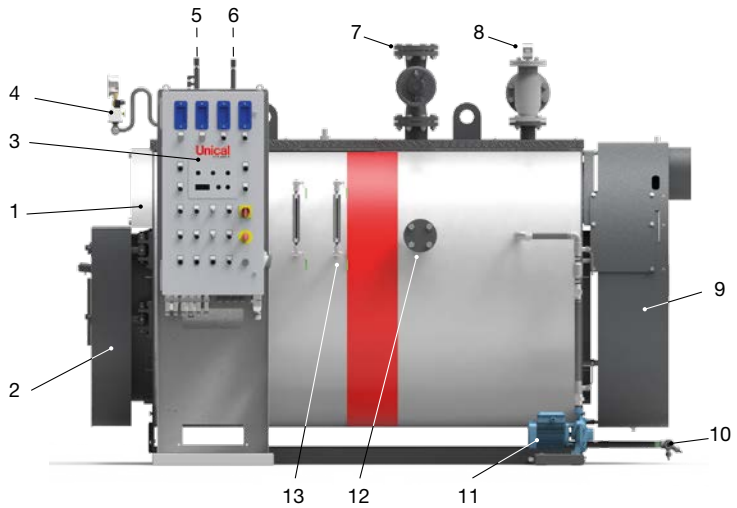

TECHNICAL DATA

Modello	Steam production	Nominal output *	Nominal Input STD **	Nominal Input HPO **	Nomina Input HP **	Max. working pressure	Water content at level	Total volume	ΔP smoke side STD	ΔP smoke side HPO	ΔP smoke side HP	Burner head min. length	Burner head max. dia.
	kg/h	kW	kW	kW	kW	bar	l	l	mbar	mbar	mbar	mm	mm
140	140	94	104.4	102.2	98.9	0.98	310	410	2.0	2.3	2.6	340	210
160	160	107	118.9	116.3	112.6	0.98	310	410	2.3	2.5	2.8	340	210
200	200	134	148.9	145.7	141.1	0.98	310	410	2.6	2.9	3.2	340	210
300	300	201	223.3	218.5	211.6	0.98	568	730	2.2	2.7	3.2	340	210
400	400	268	297.8	291.3	282.1	0.98	568	730	2.6	3.3	4.2	340	210
500	500	335	372.2	364.1	352.6	0.98	814	1040	2.8	3.6	4.5	340	240
600	600	402	446.7	437.0	423.2	0.98	814	1040	3.5	4.3	5.1	340	240
800	800	537	596.7	583.7	565.3	0.98	1160	1545	3.8	4.4	5.1	380	240
1000	1000	671	745.6	729.3	706.3	0.98	1160	1545	4.2	5.0	5.8	380	240
1250	1250	838	931.1	910.9	882.1	0.98	1663	2250	4.5	5.2	5.9	400	280
1500	1500	1006	1117.8	1093.5	1058.9	0.98	1663	2250	5.1	5.9	6.7	400	280
1750	1750	1174	1304.4	1276.1	1235.8	0.98	2140	2890	5.5	6.1	6.7	420	280
2000	2000	1341	1490.0	1457.6	1411.6	0.98	2140	2890	6.0	6.8	7.6	420	280
2500	2500	1677	1863.3	1822.8	1765.3	0.98	2970	4060	6.8	7.2	7.6	420	360
3000	3000	2012	2235.6	2187.0	2117.9	0.98	2970	4060	7.0	7.8	8.6	420	360
3500	3500	2347	2607.8	2551.1	2470.5	0.98	3490	4770	7.6	8.5	9.5	450	400
4000	4000	2683	2981.1	2916.3	2824.2	0.98	4155	5780	8.6	9.8	11.0	450	400

* with feeding water temperature = 70°C and pressure = 1 bar ** According working pressure and load conditions

PRODUCT PLUS VALUES

- **EXCELLENT EFFICIENCY**
  up to 97% with special ESALU and economiser
- **SMOKE CHAMBER PREARRANGEMENT**
  for possible economiser integration, also with the boiler already installed
- **EFFICIENT THERMAL INSULATION**
  given by:
  - high total thickness, made by joining two rock wool layers with aluminium foil
  - insulation between the casing and the hot parts of the boiler body for thermal bridges elimination
- **REVERSIBLE DOOR OPENING**
  hinges and closing bolts adjustment in all directions
- **PLATFORM**
  in checker plate, placed in the upper part
- **SIMPLIFIED ELECTRICAL CONNECTION**
  via fast coupling connectors (optional)
- **BOARD PANELS**
  electromechanical or electronic, expandible (optional)
- **POSSIBLE COMBINATION**
  with one, two, three stage or modulating burners
- **IMPLEMENTABLE FUNCTIONS**
  boiler and board panel designed for the integration of optional kits, also with boiler already installed

TYPE OF PIPES

SMOOTH PIPES

The smooth smoke pipes, suitable for gas, light and heavy oil operation, constituting the tube bundle, increase the thermal exchange and allow the removal of the residual combustion products.
They are formed by pipes with, inside, helical turbulators.
They are standard supplied for gas, light and heavy oil operation.

Efficiency up to 91%.
In function of working pressure of the boiler.

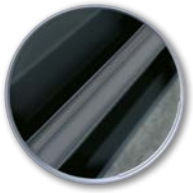

ESA PIPES

BREVETTO Unical PATENT

The ESA smoke pipes (UNICAL patent), suitable for gas and light oil operation, constituting the tube bundle, increase the thermal exchange and allow the removal of the residual combustion products.
They are formed by pipes with, inside, six 60° sectorial pipes. The adoption of the ESA pipes allowed to reach high performances in terms of efficiency, with important reduction in terms of running costs, fuel consumption and polluting emissions. They are standard supplied for gas and light oil operation.

Efficiency up to 93%.
In function of working pressure of the boiler.

ESALU PIPES

BREVETTO Unical PATENT

The ESALU smoke pipes (UNICAL patent), suitable for gas, constituting the tube bundle, allow to reach a very high thermal exchange. They are formed by pipes with, inside, special inserts of different types and shapes. The adoption of the ESALU pipes allowed to reach high performances in terms of efficiency, with important reduction in terms of running costs, fuel consumption and polluting emissions.
They are standard supplied for gas operation.

Efficiency up to 95%.
In function of working pressure of the boiler.

DIMENSIONS

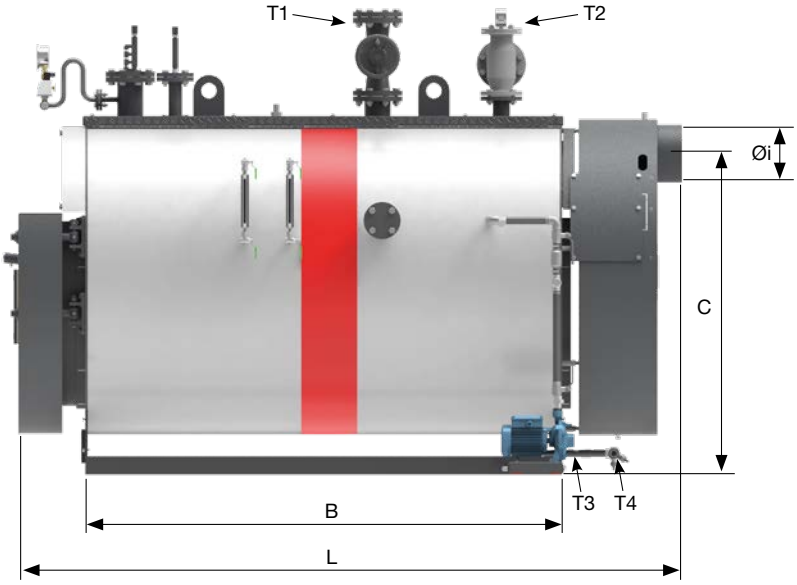

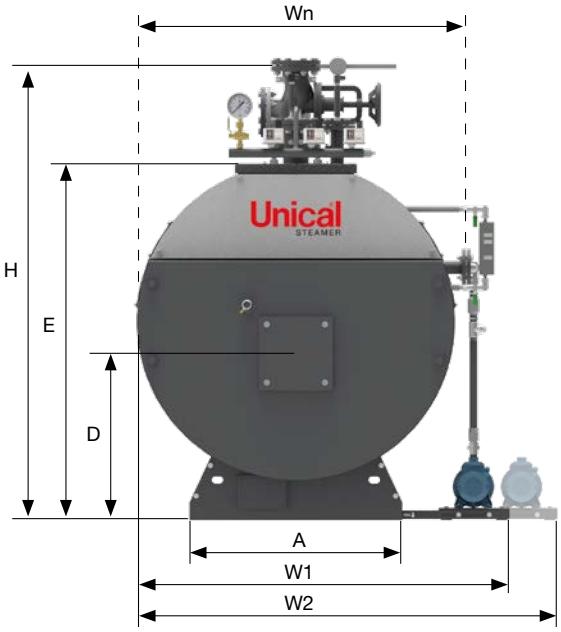

Model	Wn	W1	W2	L	H	A	B	C	D	E	Øi	T1	T2	T3	T4	Empty weight	Total weight
	mm	mm	mm	mm	mm	mm	mm	mm	mm	mm	mm					kg	kg
140	1126	1370	1629	1800	1485	720	1100	725	580	1220	212	DN 50	DN 32	1"	1/2"	1100	1420
160	1126	1370	1629	1800	1485	720	1100	725	580	1220	212	DN 50	DN 32	1"	1/2"	1100	1420
200	1126	1370	1629	1800	1485	720	1100	725	580	1220	212	DN 50	DN 32	1"	1/2"	1100	1420
300	1225	1417	1687	2350	1630	780	1550	1167	635	1340	212	DN 65	DN 40	1"	1"	1460	2028
400	1225	1417	1687	2350	1630	780	1550	1167	635	1340	212	DN 65	DN 40	1"	1"	1460	2028
500	1342	1543	1813	2555	1800	860	1750	1266	685	1460	212	DN 80	DN 50	1"	1"	1840	2654
600	1342	1543	1813	2555	1800	860	1750	1266	685	1460	212	DN 80	DN 50	1"	1"	1840	2654
800	1495	1670	1945	2950	1980	950	2120	1379	745	1600	252	DN 100	DN 65	1"	1"	2240	3600
1000	1495	1670	1945	2950	1980	950	2120	1379	745	1600	252	DN 100	DN 65	1"	1"	2240	3600
1250	1628	1804	2061	3410	2220	1090	2527	1417	860	1790	302	DN 125	DN 80	1"	1"	3190	4853
1500	1628	1804	2061	3410	2220	1090	2527	1417	860	1790	302	DN 125	DN 80	1"	1"	3190	4853
1750	1756	1934	2215	3765	2350	1200	2750	1482	905	1920	352	DN 125	DN 100	1"	1 1/2"	3970	6110
2000	1756	1934	2215	3765	2350	1200	2750	1482	905	1920	352	DN 125	DN 100	1"	1 1/2"	3970	6110
2500	2030	2100	2386	3858	2725	1470	2830	1677	1080	2250	402	DN 150	DN 80 (2x)	1"	1 1/2"	5640	8610
3000	2030	2100	2386	3858	2725	1470	2830	1677	1080	2250	402	DN 150	DN 80 (2x)	1"	1 1/2	5640	8610
3500	2030	2100	2386	4050	2725	1470	3330	1410	1080	2250	502	DN 150	DN 100 (2x)	1"	1 1/2"	6390	9880
4000	2300	2400	2680	4380	3192	1700	3430	1650	1165	2473	502	DN 200	DN 150 (2x)	1 1/2"	1 1/2"	6890	11045

BAHR’12 OR

HIGH PRESSURE STEAM BOILER, THREE PASS REVERSE FLAME 90% EFFICIENCY								
OUTPUT RANGE	from 204 kW (300 kg/h) to 4089 kW (6000 kg/h)							
TYPE	OR							
	smooth pipe							
FUEL	gas, light & heavy oil							
DESIGN PRESSURE	12 bar (higher pressure on request)							
MODELS	300	400	500	600	800	1000	1250	1500
	1750	2000	2500	3000	3500	4000	5000	6000

DESCRIPTION

High pressure steam boiler, three pass reversed flame, smooth pipes with turbulators, 90% efficiency [1].

BAHR'12 OR is a family of packaged smoke tube steam boilers, three pass reversed flame, wet back. Standard safety pressure up to 12 bar (higher pressure available on request) and output from 300 to 6000 kg/h. It can be operated with liquid or gaseous fuels. Every model is complete with regulations and safety accessories for automatic operation and easy commissioning.
In compliance to the current laws, each steam boiler undergoes a conformity assessment, carried out by a Notified Body. The conformance to the essential safety requirements demanded by the European Pressure Equipment Directive 2014/68/UE (PED) is guaranteed by the CE mark.

Design features:

By means of the reverse flame principle the smoke gases in the combustion chamber are diverted to the front, then reversed again to the smoke tube sections and discharged through the chimney connection. The appliance is designed to ensure low heating loads in the combustion chamber and low superficial loads.

- **Boiler body:** is made up of a cylindrical shell and a wet back furnace, made of high quality steel. All the materials have certificates attesting their chemical and mechanical characteristics, the controls are carried out during each production stage, and, theirs suitability for use as well. The welding seams are carried out by qualified personnel in compliance to certified procedures and are subjected to Non Destructive Tests, in accordance to an internal "Manufacturing and Control" program. Once the boilers have been manufactured they are subjected to hydraulic testing in accordance to the requirement 7.4 – Annex I, laid down in the Directive 2014/68/UE (PED).
- **Smoke tubes:** made of high quality steel, are welded to tube plates. Pipes are equipped with helical turbulators.
- **Front door:** is built in welded steel plate, completely cladded internally with a layer of insulation material and with a layer of high density refractory material. The door is fitted with hinges which enable it to be easily adjusted and quickly opened. Moreover, the door is fitted with a self-cleaning sight glass for combustion control during boiler operation.
- **Rear smoke-box:** is built in welded steel plate and fixed on to the tube plate by nuts for an easy access to it. It is fitted with a small door for cleaning purposes and the horizontal flue connection (vertical on request), with a diameter sized to the boiler's output. The rear smoke-box can be accessorized with and external economizer.
- **Basement:** is built with a steel frame, welded to the tube plates and closed with steel plates.
- **Walkway:** positioned on the top part of the boiler, is made of steel, covered with chequered plate and completed; on request with handrail and access ladder.
- **Insulation:** the shell is thermally insulated with a 100 mm rock wool cladding binded with high density, thick thermosetting resins, suitably supported and covered externally in 10/10 thick enamelled aluminum.

Standard equipment: [2]

- Steam main globe valve.
- n. 2 spring loaded safety valves.
- n. 2 reflecting level indicators, with flanged connections, purging and cut-off cocks.
- Control board panel IP55 400V - 3+N - 50Hz complete with:
  - n. 1 large manometer with 3 way cock for manometer calibration.
  - n. 1 safety pressure switch with manual reset onto the board panel, CE PED certified.
  - n. 1 limit working pressure switch.
  - n. 1 regulation pressure switch for two stages burners or probe for modulating burners.
  - n. 2 safety minimum level switches, with manual reset CE certified.
  - n. 2 water level probes for ON-OFF pump regulation.
- Feeding group complete with 2 vertical multistage centrifugal pumps.
- Valve assembly for feeding circuit, with relevant pipes already fitted.
- Automatic group for level control.
- n. 1 manual bottom blowdown valve.
- Man-hole on top and hand-hole on water side.
- Integral steam drier for high steam quality.
- Blind burner plate.
- Carbon steel turbulators.
- Lifting lugs.
- Document folder enclosing:
  - Manufacturer's Declaration of Conformity in compliance with the Annex VII of the European Directive 2014/68/UE (PED)
  - Installation, operation and service manuals.
  - Certificates of safety components.
  - Control board's electric schemes and related Declaration of Conformity.
  - Water characteristics: requirements concerning the quality of water supply, the water in the boiler, frequency and type of sample tests to do.

Options:
- Kit of "Second boiler water feeding pump"
- Kit of "maximum safety level"
- Kit TDS (Total Dissolved Salts)
- Kit of "Automatic de-sludging" (Blow down)
- Kit "24 hr" or "72 hr" Supplied with electronic board panel Unical, model IML (Industrial Multi Logic) or Unical IMC
- Kit EC (gas) / Kit EC (oil)
- Pre-drilled burner plate according to request
- Oil or gas fired burner
- Emergency boiler water feeding group (steam injector)

(1) This value is intended without economizer and may change according working pressure and load conditions.

(2) The quantity and the model may vary according to the configuration.

MAIN COMPONENTS

1. Boiler body
2. Front door
3. Board panel
4. Instruments assembly
5. Steam valve
6. Safety valves
7. Rear smoke chamber
8. Drain
9. Pump feeding group
10. TDS connection
11. Level gauge

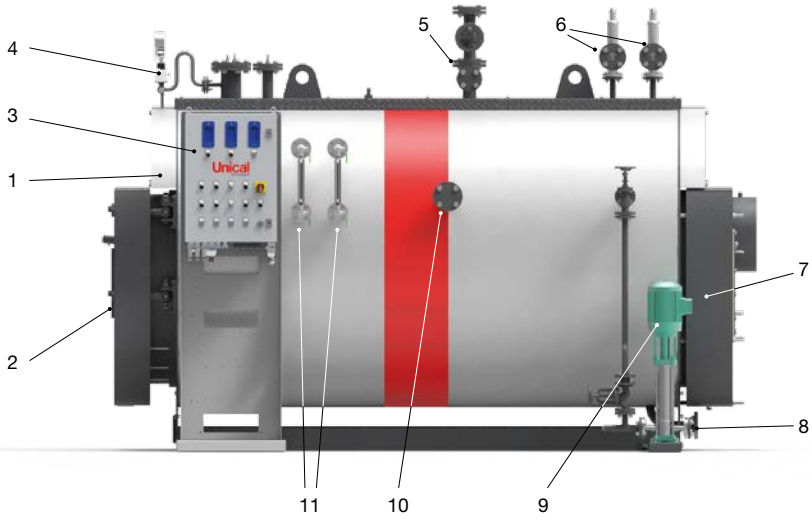

TECHNICAL DATA

Model	Steam production	Nominal output *	Nominal input OR **	Max. working pressure	Water content at level	Total volume	ΔP smoke side	Burner head min. length	Burner head max. dia.
	kg/h	kW	kW	bar	l	l	mbar	mm	mm
300	300	204	226.7	12	540	730	2.2	340	210
400	400	273	303.3	12	540	730	2.6	340	210
500	500	341	378.9	12	820	1030	2.8	340	240
600	600	409	454.4	12	820	1030	3.5	340	240
800	800	560	622.2	12	1080	1500	3.8	380	240
1000	1000	700	777.8	12	1080	1500	4.2	380	240
1250	1250	852	946.7	12	1555	2195	4.5	400	280
1500	1500	1022	1135.6	12	1555	2195	5.1	400	280
1750	1750	1193	1325.6	12	2005	2810	5.5	420	280
2000	2000	1363	1514.4	12	2005	2810	6.0	420	280
2500	2500	1704	1893.3	12	2890	3950	6.8	420	360
3000	3000	2045	2272.2	12	2890	3950	7.0	420	360
3500	3500	2386	2651.1	12	3370	4600	7.3	450	360
4000	4000	2726	3028.9	12	4155	5780	8.0	450	400
5000	5000	3408	3786.7	12	5800	7730	8.8	450	400
6000	6000	4089	4543.3	12	6760	8600	8.8	450	420

* with feeding water temperature = 80°C and pressure = 12 bar ** According working pressure and load conditions

PRODUCT PLUS VALUES

- **EFFICIENT THERMAL INSULATION**
  given by:
  - high total thickness, made by joining two rock wool layers with aluminium foil
  - insulation between the casing and the hot parts of the boiler body for thermal bridges elimination
- **REVERSIBLE DOOR OPENING**
  hinges and closing bolts adjustment in all directions
- **PLATFORM**
  in checker plate, placed in the upper part
- **SIMPLIFIED ELECTRICAL CONNECTION**
  via fast coupling connectors (optional)
- **BOARD PANEL**
  electromechanical or electronic, expandible (optional)
- **POSSIBLE COMBINATION**
  with one, two, three stage or modulating burners
- **IMPLEMENTABLE FUNCTIONS**
  boiler and board panel designed for the integration of optional kits, also with boiler already installed
- **SMOOTH PIPES**
  The smooth smoke pipes, suitable for gas, light and heavy oil operation, constituting the tube bundle, increase the thermal exchange and allow the removal of the residual combustion products.
  They are formed by pipes with, inside, helical turbulators.
  They are standard supplied for gas, light and heavy oil operation.

TYPE OF PIPES

SMOOTH PIPES

The smooth smoke pipes, suitable for gas, light and heavy oil operation, constituting the tube bundle, increase the thermal exchange and allow the removal of the residual combustion products.
They are formed by pipes with, inside, helical turbulators.
They are standard supplied for gas, light and heavy oil operation.

Efficiency up to 90%.
In function of working pressure of the boiler.

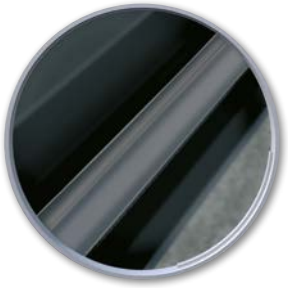

DIMENSIONS

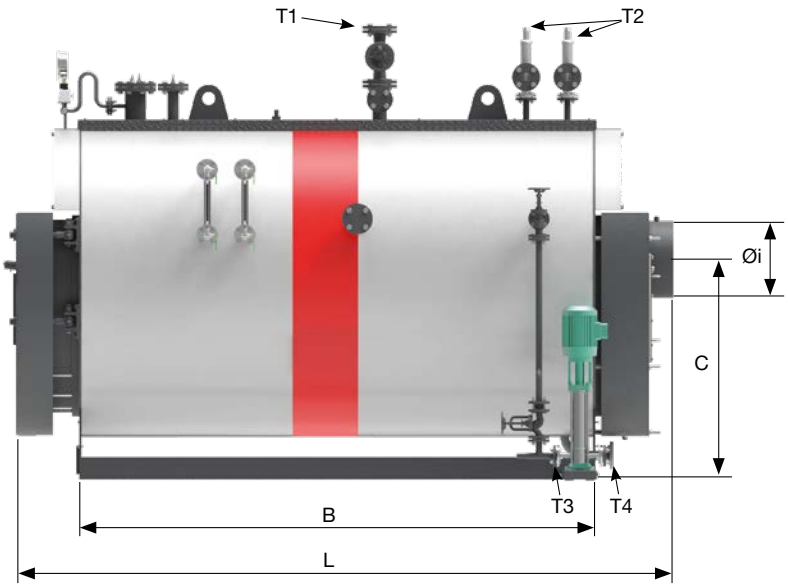

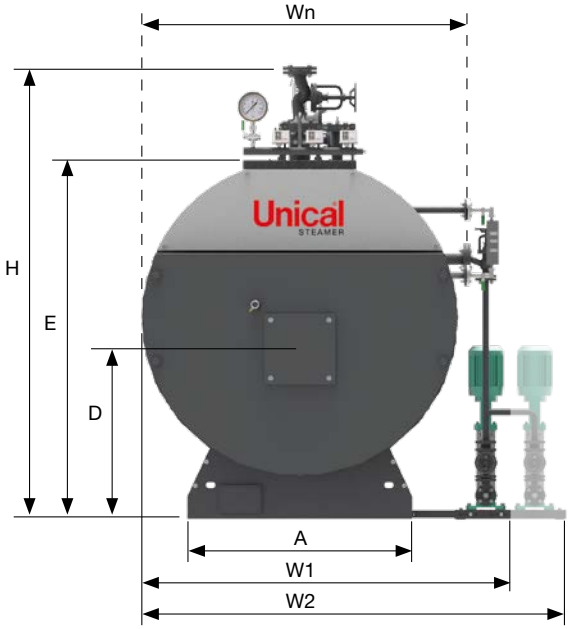

Model	Wn	W1	W2	L	H	A	B	C	D	E	Øi	T1	T2	T3	T4	Empty weight	Total weight
	mm	mm	mm	mm	mm	mm	mm	mm	mm	mm	mm					kg	kg
300	1204	1419	1741	2320	1820	780	1550	815	635	1333	211	DN32	DN40	DN25	DN25	1620	2145
400	1204	1419	1741	2320	1820	780	1550	815	635	1333	211	DN32	DN40	DN25	DN25	1620	2145
500	1325	1572	1870	2530	1940	860	1750	880	695	1453	251	DN40	DN40	DN25	DN25	2010	2770
600	1325	1572	1870	2530	1940	860	1750	880	695	1453	251	DN40	DN40	DN25	DN25	2010	2770
800	1465	1697	1995	2900	2077	950	2120	935	745	1593	351	DN50	DN40	DN25	DN25	2830	3910
1000	1465	1697	1995	2900	2077	950	2120	935	745	1593	351	DN50	DN40	DN25	DN25	2830	3910
1250	1605	1814	2131	3259	2294	1090	2526	1015	860	1783	401	DN65	DN40	DN25	DN25	3710	5265
1500	1605	1814	2131	3259	2294	1090	2526	1015	860	1783	401	DN65	DN40	DN25	DN25	3710	5265
1750	1735	1948	2261	3559	2422	1200	2750	1170	905	1918	401	DN65	DN40	DN25	DN40	4610	6615
2000	1735	1948	2261	3559	2422	1200	2750	1170	905	1918	401	DN65	DN40	DN25	DN40	4610	6615
2500	2005	2242	2539	3640	2774	1470	2830	1405	1080	2243	501	DN80	DN40	DN32	DN40	6560	9450
3000	2005	2242	2539	3640	2774	1470	2830	1405	1080	2243	501	DN80	DN40	DN32	DN40	6560	9450
3500	2236	2492	2790	4100	2739	1470	3330	1405	1080	2243	501	DN80	DN40	DN32	DN40	7650	11020
4000	2236	2492	2790	4100	3031	1700	3300	1500	1170	2473	601	DN100	DN40	DN32	DN40	8980	13135
5000	2336	2549	2862	4590	3173	1800	3800	1525	1195	2548	651	DN125	DN50	DN32	DN40	10540	16340
6000	2336	2549	2862	4810	3315	1850	4003	1600	1210	2618	651	DN150	DN50	DN40	DN40	11750	18510

BAHR’12

HIGH PRESSURE STEAM BOILER, THREE PASS REVERSE FLAME 96% EFFICIENCY								
OUTPUT RANGE	from 204 kW (300 kg/h) to 4089 kW (6000 kg/h)							
TYPE	STD			HPO			HP	
	tubo liscio			tubo ESA			tubo ESALU	
FUEL	gas, light & heavy oil			gas, light oil			gas	
DESIGN PRESSURE	12 bar (higher pressure on request)							
MODELS	300	400	500	600	800	1000	1250	1500
	1750	2000	2500	3000	3500	4000	5000	6000

DESCRIPTION

High pressure steam boiler, three pass reverse flame, with efficiency from 90% up to 96%(1) according the installed smoke tube (STD, HPO, HP).

BAHR'12 is a family of packaged smoke tube steam boilers, three pass reverse flame, wet back. Standard safety pressure up to 12 bar (higher pressure available on request) and output from 300 to 6000 kg/h. It can be operated with liquid or gaseous fuels. Every model is complete with regulations and safety accessories for automatic operation and easy commissioning.
In compliance to the current laws, each steam boiler undergoes a conformity assessment, carried out by a Notified Body. The conformance to the essential safety requirements demanded by the European Pressure Equipment Directive 2014/68/UE (PED) is guaranteed by the CE mark.

Design features:

By means of the reverse flame principle the smoke gases in the combustion chamber are diverted to the front, then reversed again to the smoke tube sections and discharged through the chimney connection. The appliance is designed to ensure low heating loads in the combustion chamber and low superficial loads.

- **Boiler body:** is made up of a cylindrical shell and a wet back furnace, made of high quality steel. All the materials have certificates attesting their chemical and mechanical characteristics, the controls are carried out during each production stage, and, theirs suitability for use as well. The welding seams are carried out by qualified personnel in compliance to certified procedures and are subjected to Non Destructive Tests, in accordance to an internal "Manufacturing and Control" program. Once the boilers have been manufactured they are subjected to hydraulic testing in accordance to the requirement 7.4 – Annex I, laid down in the Directive 2014/68/UE (PED).
- **Smoke tubes:** made of high quality steel, are welded to tube plates. Pipes are equipped with steel turbulators or fitted with aluminum and/or steel inserts according the installed smoke tube.
- **Front door:** is built in welded steel plate, completely cladded internally with a layer of insulation material and with a layer of high density refractory material. The door is fitted with hinges which enable it to be easily adjusted and quickly opened. Moreover, the door is fitted with a self-cleaning sight glass for combustion control during boiler operation.
- **Rear smoke-box:** is built in welded steel plate and fixed on to the tube plate by nuts for an easy access to it. It is fitted with a small door for cleaning purposes and an horizontal flue connection (vertical on request), with a diameter sized to the boiler's output. The rear smoke-box is pre-arranged for the installation of an integral economizer.
- **Basement:** is built with a steel frame, welded to the tube plates and closed with steel plates.
- **Walkway:** positioned on the top part of the boiler, is made of steel, covered with chequered plate and completed; on request with handrail and access ladder.
- **Insulation:** the shell is thermally insulated with a 100 mm rock wool cladding binded with high density, thick thermosetting resins, suitably supported and covered externally in 10/10 thick enamelled aluminum. The frontal parts of the boiler are also insulated with rock wool and covered externally with a metallic box.

Standard equipment: (2)

- Steam main globe valve.
- n. 2 spring loaded safety valves.
- n. 2 reflecting level indicators, with flanged connections, purging and cut-off cocks.
- Control board panel IP55 400V - 3+N - 50Hz complete with:
  - n. 1 large manometer with 3 way cock for manometer calibration.
  - n. 1 safety pressure switch with manual reset onto the board panel, CE PED certified.
  - n. 1 limit working pressure switch.
  - n. 1 regulation pressure switch for two stages burners or probe for modulating burners.
  - n. 2 safety minimum level switches, with manual reset CE certified.
  - n. 2 water level probes for ON-OFF pump regulation.
- Feeding group complete with 2 vertical multistage centrifugal pumps.
- Valve assembly for feeding circuit, with relevant pipes already fitted.
- Automatic group for level control.
- n. 1 manual bottom blowdown valve.
- Man-hole on top and hand-hole on water side.
- Integral steam drier for high steam quality.
- Blind burner plate.
- Turbulators (STD version) or special high efficiency pipes fitted with inserts (HPO, HP versions).
- Lifting lugs.
- Document folder enclosing:
  - Manufacturer's Declaration of Conformity in compliance with the Annex VII of the European Directive 2014/68/UE (PED)
  - Installation, operation and service manuals.
  - Certificates of safety components.
  - Control board's electric schemes and related Declaration of Conformity.
  - Water characteristics: requirements concerning the quality of water supply, the water in the boiler, frequency and type of sample tests to do.

Options:

- Kit of "Second boiler water feeding pump"
- Kit of "maximum safety level"
- Kit TDS (Total Dissolved Salts)
- Kit of "Automatic de-sludging" (Blow down)
- Kit "24 hr" or "72 hr" Supplied with electronic board panel Unical, model IML (Industrial Multi Logic) or IMC
- Kit EC (gas) / Kit EC (oil)
- Pre-drilled burner plate according to request
- Oil or gas fired burner
- Emergency boiler water feeding group (steam injector)

Special versions

BAHR'12 24 hr / 72 hr

- equipped with either "IML" or "IMC board panel" and "Kit 24/72 hr" to obtain the certification for operation "without continuous surveillance" up to a maximum of 24/72 hr.

EC / HPOEC / HPEC versions

- To increase more the already high steam boiler efficiency, without influencing the dimensions the boilers are already preset to fit, on request (in the factory or later, on the field), the economizer Kit EC, which is specific for each model and is available for both, gas and oil versions.

(1) This value is intended with economizer and may change according working pressure and load conditions.
(2) The quantity and the model may vary according to the configuration.

MAIN COMPONENTS

1. Boiler body
2. Front door
3. Board panel
4. Instruments assembly
5. Steam valve
6. Safety valve
7. Rear smoke chamber
8. Drain
9. Pump feeding group
10. TDS connection
11. Level gauge

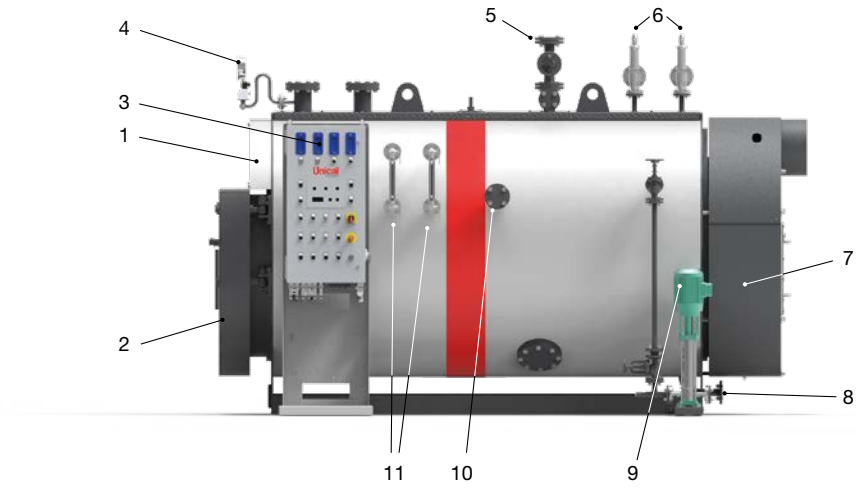

TECHNICAL DATA

Model	Steam production	Nominal output *	Nominal input STD **	Nominal input HPO **	Nominal input HP **	Max. working pressure	Water content at level	Total volume	ΔP smoke side STD	ΔP smoke side HPO	ΔP smoke side HP	Burner head min. length	Burner head max. dia.
	kg/h	kW	kW	kW	kW	bar	l	l	mbar	mbar	mbar	mm	mm
300	300	204	226.7	221.7	214.7	12	540	730	2.2	2.9	3.7	340	210
400	400	273	303.3	296.7	287.4	12	540	730	2.6	3.4	4.2	340	210
500	500	341	378.9	370.7	358.9	12	820	1030	2.8	3.6	4.5	340	240
600	600	409	454.4	444.6	430.5	12	820	1030	3.5	4.3	5.1	340	240
800	800	560	622.2	608.7	589.5	12	1080	1500	3.8	4.4	5.1	380	240
1000	1000	700	777.8	760.9	736.8	12	1080	1500	4.2	5.0	5.8	380	240
1250	1250	852	946.7	926.1	896.8	12	1555	2195	4.5	5.2	5.9	400	280
1500	1500	1022	1135.6	1110.9	1075.8	12	1555	2195	5.1	5.9	6.7	400	280
1750	1750	1193	1325.6	1296.7	1255.8	12	2005	2810	5.5	6.1	6.7	420	280
2000	2000	1363	1514.4	1481.5	1434.7	12	2005	2810	6.0	6.8	7.6	420	280
2500	2500	1704	1893.3	1852.2	1793.7	12	2890	3950	6.8	7.2	7.6	420	360
3000	3000	2045	2272.2	2222.8	2152.6	12	2890	3950	7.0	7.8	8.6	420	360
3500	3500	2386	2651.1	2593.5	2511.6	12	3370	4600	7.3	8.1	9.0	450	360
4000	4000	2726	3028.9	2963.0	2869.5	12	4155	5780	8.0	8.8	9.6	450	400
5000	5000	3408	3786.7	3704.3	3587.4	12	5800	7730	8.8	9.6	10.4	450	400
6000	6000	4089	4543.3	4444.6	4304.2	12	6760	8600	8.8	10.0	11.2	450	420

*with feeding water temperature = 80°C and pressure = 12 bar ** According working pressure and load conditions

PRODUCT PLUS VALUES

- **EXCELLENT WATER EFFICIENCY**
  up to 96% with special ESALU and economiser
- **SMOKE CHAMBER PREARRANGEMENT**
  for possible economiser integration, also with the boiler already installed
- **EFFICIENT THERMAL INSULATION**
  given by:
  - high total thickness, made by joining two rock wool layers with aluminium foil
  - insulation between the casing and the hot parts of the boiler body for thermal bridges elimination
- **REVERSIBLE DOOR OPENING**
  hinges and closing bolts adjustment in all directions
- **PLATFORM**
  in checker plate, placed in the upper part
- **SIMPLIFIED ELECTRICAL CONNECTION**
  via fast coupling connectors (optional)
- **BOARD PANEL**
  electromechanical or electronic, expandable (optional)
- **POSSIBLE COMBINATION**
  with one, two, three stage or modulating burners
- **IMPLEMENTABLE FUNCTIONS:**
  boiler and board panel designed for the integration of optional kits, also with boiler already installed.

TYPE OF PIPES

SMOOTH PIPES

The smooth smoke pipes, suitable for gas, light and heavy oil operation, constituting the tube bundle, increase the thermal exchange and allow the removal of the residual combustion products.
They are formed by pipes with, inside, helical turbulators.
They are standard supplied for gas, light and heavy oil operation.

Efficiency up to 90%.
In function of working pressure of the boiler.

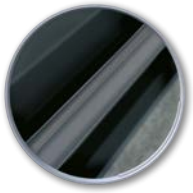

ESA PIPES

BREVETTO Unical PATENT

The ESA smoke pipes (UNICAL patent), suitable for gas and light oil operation, constituting the tube bundle, increase the thermal exchange and allow the removal of the residual combustion products.
They are formed by pipes with, inside, six 60° sectorial pipes. The adoption of the ESA pipes allowed to reach high performances in terms of efficiency, with important reduction in terms of running costs, fuel consumption and polluting emissions. They are standard supplied for gas and light oil operation.

Efficiency up to 92%.
In function of working pressure of the boiler.

ESALU PIPES

BREVETTO Unical PATENT

The ESALU smoke pipes (UNICAL patent), suitable for gas, constituting the tube bundle, allow to reach a very high thermal exchange.
They are formed by pipes with, inside, special inserts of different types and shapes. The adoption of the ESALU pipes allowed to reach high performances in terms of efficiency, with important reduction in terms of running costs, fuel consumption and polluting emissions.
They are standard supplied for gas operation.

Efficiency up to 94%.
In function of working pressure of the boiler.

DIMENSIONS

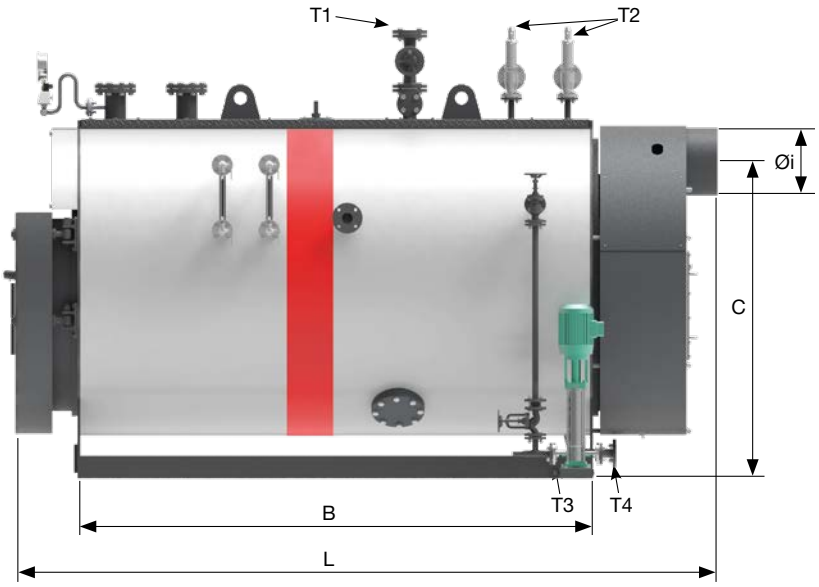

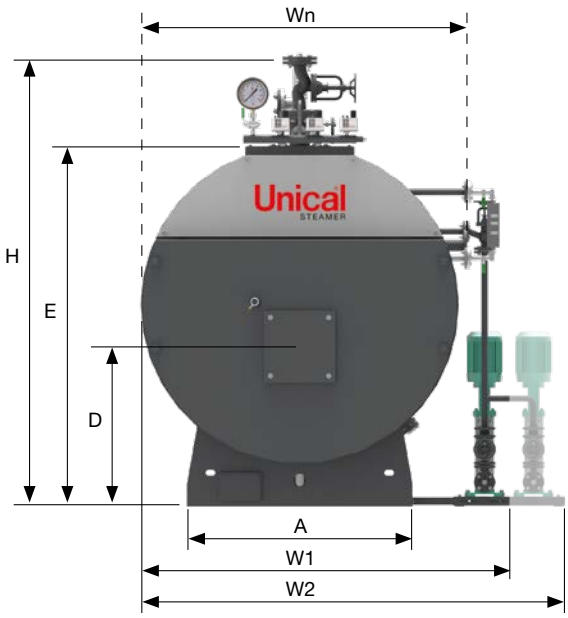

Model	Wn	W1	W2	L	H	A	B	C	D	E	Øi	T1	T2	T3	T4	Empty weight	Total weight
	mm	mm	mm	mm	mm	mm	mm	mm	mm	mm	mm					kg	kg
300	1204	1419	1741	2340	1820	780	1550	1167	635	1333	211	DN32	DN40	DN25	DN25	1650	2175
400	1204	1419	1741	2340	1820	780	1550	1167	635	1333	211	DN32	DN40	DN25	DN25	1650	2175
500	1325	1572	1870	2565	1940	860	1750	1266	685	1453	211	DN40	DN40	DN25	DN25	2040	2800
600	1325	1572	1870	2565	1940	860	1750	1266	685	1453	211	DN40	DN40	DN25	DN25	2040	2800
800	1465	1697	1995	2950	2077	950	2120	1349	745	1593	251	DN50	DN40	DN25	DN25	2860	3940
1000	1465	1697	1995	2950	2077	950	2120	1379	745	1593	251	DN50	DN40	DN25	DN25	2860	3940
1250	1605	1814	2131	3414	2294	1090	2526	1555	860	1783	301	DN65	DN40	DN25	DN25	3750	5305
1500	1605	1814	2131	3414	2294	1090	2526	1555	860	1783	301	DN65	DN40	DN25	DN25	3750	5305
1750	1735	1948	2261	3543	2422	1200	2750	1685	905	1918	351	DN65	DN40	DN25	DN40	4650	6655
2000	1735	1948	2261	3543	2422	1200	2750	1685	905	1918	351	DN65	DN40	DN25	DN40	4650	6655
2500	2005	2242	2539	3860	2774	1470	2830	2004	1080	2243	401	DN80	DN40	DN32	DN40	6600	9490
3000	2005	2242	2539	3860	2774	1470	2830	2004	1080	2243	401	DN80	DN40	DN32	DN40	6600	9490
3500	2236	2492	2790	4360	2774	1470	3330	2004	1080	2243	401	DN80	DN40	DN32	DN40	7700	11070
4000	2236	2492	2790	4360	3031	1700	3300	2187	1170	2473	451	DN100	DN40	DN32	DN40	9030	13185
5000	2336	2549	2862	4943	3173	1800	3800	2261	1195	2548	481	DN125	DN50	DN32	DN40	10590	16390
6000	2336	2549	2862	5236	3315	1850	4003	2326	1210	2618	481	DN150	DN50	DN40	DN40	11800	18560

BAHR'12 3G

HIGH PRESSURE PACKAGED STEAM BOILER, GENUINE THREE PASS FIRETUBE, EFFICIENCY UP TO 96%						
OUTPUT RANGE	from 341 kW (500 kg/h) to 2728 kW (4000 kg/h)					
TYPE	STD			HP		
	smooth pipe			ESALU pipe		
FUEL	gas, light & heavy oil			gas		
DESIGN PRESSURE	12 bar (higher pressure on request)					
MODELS	500	800	1000	1250	1500	1750
	2000	2500	3000	3500	4000	-

DESCRIPTION

High pressure packaged steam boiler, genuine three-pass fire tube, horizontal, from 90% up to 96% efficiency [1] according the installed smoke tube (HPO, HP).

BAHR'12 3G is a family of packaged smoke tube steam boilers, genuine three-pass, and wet back. Standard safety pressure up to 12 bar (higher pressure available on request) and output from 500 to 4000 kg/h. With a large steam chamber and large evaporator for an high steam quality. It can be operated with liquid or gaseous fuels. Every model is complete with regulations and safety accessories for automatic operation and easy commissioning.

In compliance to the current laws, each steam boiler undergoes a conformity assessment, carried out by a Notified Body. The conformance to the essential safety requirements demanded by the European Pressure Equipment Directive 2014/68/UE (PED) is guaranteed by the CE mark.

Design features:

By means of the three-pass design the smoke gases in the combustion chamber are diverted to the front through the first set of fire tubes by the reversing chamber; then reversed again by the frontal smoke box to the second smoke tube sections and discharged through the chimney connection. The appliance is designed to ensure low heating loads in the combustion chamber, low superficial loads and low NOx emissions (with Low NOx burners).

- **Boiler body:** is made of a cylindrical shell and a wet back furnace, flat tube plates, made of high quality steel. All the materials have certificates attesting their chemical and mechanical characteristics, the controls are carried out during each production stage, and, theirs suitability for use as well. The welding seams are carried out by qualified personnel in compliance to certified procedures and are subjected to Non Destructive Tests, in accordance to an internal “Manufacturing and Control” program. Once the boilers have been manufactured they are subjected to hydraulic testing in accordance to the requirement 7.4 – Annex I, laid down in the Directive 2014/68/UE (PED).
- **Smoke tubes:** made of high quality steel, are welded to tube plates, and are with helical turbulators or special metal extrusions according the version.
- **Reversing chamber:** is built in welded steel plate, completely water-cooled, and connected to the rear smoke-box with supports.
- **Front door:** is built in welded steel plate, completely cladded internally with layers of insulating and refractory cement. The door is fitted with hinges to be quickly opened.
- **Rear smoke-box:** is built in welded steel plate, completely cladded externally with a layer of insulation material. One door for cleaning and inspection are fitted with hinges to be quickly opened. Complete with an horizontal chimney connection with a diameter sized to the boiler’s output (vertical on request). The rear smoke-box can be accessorized with and internal removable economizer.
- **Basement:** is built with a steel frame, welded to the tube plates and closed with steel plates.
- **Walkway:** positioned on the top part of the boiler, is made of steel, covered with chequered plate and completed; on request with handrail and access ladder.
- **Insulation:** the shell is thermally insulated with a 100 mm rock wool cladding binded with high density, thick thermosetting resins, suitably supported and covered externally in 10/10 thick enamelled aluminum.

Standard equipment: (2)

- Steam main globe valve
- 2 spring loaded safety valves
- 2 reflecting level indicators, with flanged connections, purging and cut-off cocks
- Control panel board IP55 400V - 3+N - 50Hz
  - 1 large manometer with 3 way cock for manometer calibration.
  - 1 safety pressure switch with manual reset onto the panel board, CE PED certified
  - 1 limit working pressure switch.
  - 1 regulation pressure switch for two stages burners or probe for modulating burners
  - 2 safety minimum level switches, CE certified
  - 2 water level probes for ON-OFF pump regulation
- Feeding group complete with 2 vertical multistage centrifugal pumps
- Valve assembly for feeding circuit, with relevant pipes already fitted
- Automatic group for level control
- 1 manual bottom blowdown valve
- Man-hole on top and hand-hole on water side
- Integral steam drier for high steam quality
- Blind burner plate
- Lifting lugs
- Document folder enclosing:
  - Manufacturer's Declaration of Conformity in compliance with the Annex VII of the European Directive 2014/68/UE (PED)
  - Installation, operation and service manuals.
  - Certificates of safety components.
  - Control board’s electric schemes and related Declaration of Conformity.
  - Water characteristics: requirements concerning the quality of water supply, the water in the boiler, frequency and type of sample tests to do.

(1) This value is intended with economizer and may change according working pressure and load conditions.

(2) The quantity and the model may vary according to the configuration.

MAIN COMPONENTS

1. Boiler body
2. Front door
3. Rear smoke chamber (with optional integrated removable economizer)
4. Board panel
5. Instruments assembly
6. Level safety sensors
7. Steam valve
8. Safety valve
9. Automatic bottom blow down (optional)
10. TDS: salinity control/surface blow down (optional)
11. Feed water pump
12. Water level indicator

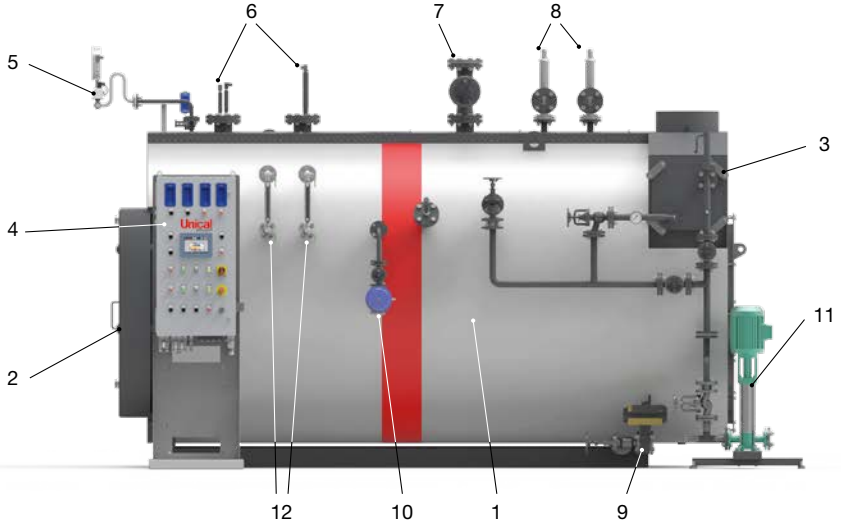

TECHNICAL DATA

Model	Steam production *	Nominal output	Nominal input STD **	Nominal input HP **	Max. working pressure	Water content at level	Total volume	ΔP smoke side STD	ΔP smoke side HP	Burner head min. length
	kg/h	kW	kW	kW	bar	l	l	mbar	mbar	mm
500	500	341	379	359	12	1205	1800	2.5	4.5	350
800	800	547	608	576	12	1240	1950	3	5	350
1000	1000	682	758	718	12	2115	3200	6	10	350
1250	1250	853	948	898	12	2500	3550	9	13.5	350
1500	1500	1023	1137	1077	12	2850	3950	4	6	350
1750	1750	1194	1327	1257	12	3020	4100	5	7	350
2000	2000	1364	1516	1436	12	3150	4200	6	10	350
2500	2500	1705	1895	1795	12	3345	4325	7	10	350
3000	3000	2046	2273	2154	12	4550	5660	9.5	11	350
3500	3500	2387	2652	2513	12	4600	6200	9.5	13.5	350
4000	4000	2728	3031	2872	12	4950	6750	11.5	17	350

*with feeding water temperature = 80°C ** According working pressure and load conditions

PRODUCT PLUS VALUES

- **Low NO_x EMISSION < 80 mg/kWh**
  because of 3 pass and Low NOx burner (on request)
- **FRONT AND REAR DOORS**
  for easy cleaning and inspection
- **HIGH EFFICIENCY**
  thanks to the 3 pass design and the possibility to install economizers (optional)
- **CONTROL PANEL**
  either electromechanic or electronic (PLC) with optional expansion kits
- **24/72 HOUR UNATTENDED OPERATIONAL**
  by the means of specific equipment

TYPE OF PIPES

SMOOTH PIPES

The smooth smoke pipes, suitable for gas, light and heavy oil operation, constituting the tube bundle, increase the thermal exchange and allow the removal of the residual combustion products.
They are formed by pipes with, inside, helical turbulators.
They are standard supplied for gas, light and heavy oil operation.

Efficiency up to 90%.
In function of working pressure of the boiler.

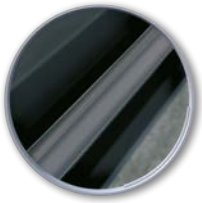

ESALU PIPES

BREVETTO Unical PATENT

The ESALU smoke pipes (UNICAL patent), suitable for gas, constituting the tube bundle, allow to reach a very high thermal exchange. They are formed by pipes with, inside, special inserts of different types and shapes. The adoption of the ESALU pipes allowed to reach high performances in terms of efficiency, with important reduction in terms of running costs, fuel consumption and polluting emissions.
They are standard supplied for gas operation.

Efficiency up to 94%.
In function of working pressure of the boiler.

DIMENSIONS

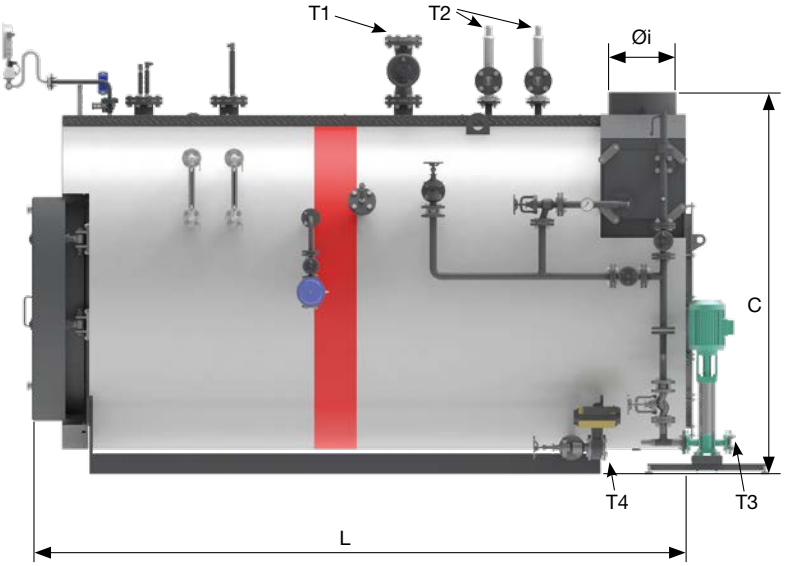

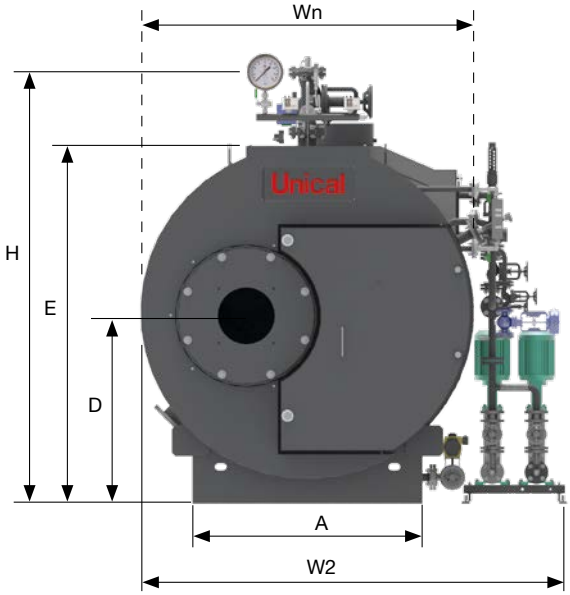

Model	Wn	W2	L	H	A	C	D	E	Øi	T1	T2	T3	T4	Empty weight	Total weight
	mm	mm	mm	mm	mm	mm	mm	mm	mm	DN	DN	DN	DN	kg	kg
500	1755	2360	2740	2120	1215	1950	900	1840	252	40	40	25	25	2600	3805
800	1755	2360	2940	2150	1215	1950	900	1840	352	50	40	25	25	3000	4240
1000	1755	2360	3140	2150	1215	1950	900	1840	352	50	40	25	25	3450	5565
1250	1755	2360	3290	2210	1215	1950	900	1840	402	65	40	25	25	3700	6200
1500	1830	2415	3435	2310	1250	2050	1025	1925	402	65	40	40	25	4200	7050
1750	1830	2415	3585	2310	1250	2050	1025	1925	402	65	40	40	25	4800	7820
2000	2050	2700	3600	2580	1450	2400	1175	2200	402	65	40	40	25	5200	8350
2500	2050	2700	3840	2600	1450	2400	1175	2200	402	80	40	40	32	6200	9545
3000	2050	2700	4190	2600	1450	2400	1175	2200	452	80	40	40	32	7000	11550
3500	2200	3000	4250	2720	1600	2450	1215	2330	502	80	50	40	32	7300	11900
4000	2200	3000	4500	2760	1600	2450	1215	2330	502	100	50	40	32	7950	12900

TRYPASS’

HIGH PRESSURE PACKAGED STEAM BOILER, GENUINE THREE-PASS FIRE TUBE HIGH PERFORMANCE								
OUTPUT RANGE	from 1328 kW (2000 kg/h) to 16607 kW (25000 kg/h)							
FUEL	gas, light oil							
DESIGN PRESSURE	12 bar (higher pressure on request)							
MODELS	2000	2500	3000	3500	4000	5000	6000	7000
	8000	10000	12000	15000	18000	20000	25000	-

DESCRIPTION

High pressure packaged steam boiler, genuine three-pass fire tube, horizontal, 90% efficiency [1].

TRYPASS is a family of packaged smoke tube steam boilers, genuine three-pass, and wet back. Standard safety pressure up to 12 bar (higher pressure available on request) and output from 2000 to 25000 kg/h. With a large steam chamber and large evaporator for an high steam quality. It can be operated with liquid or gaseous fuels. Every model is complete with regulations and safety accessories for automatic operation and easy commissioning.
In compliance to the current laws, each steam boiler undergoes a conformity assessment, carried out by a Notified Body. The conformance to the essential safety requirements demanded by the European Pressure Equipment Directive 2014/68/UE (PED) is guaranteed by the CE mark.

Design features:

By means of the three-pass design the smoke gases in the combustion chamber are diverted to the front through the first set of fire tubes by the reversing chamber; then reversed again by the frontal smoke box to the second smoke tube sections and discharged through the chimney connection. The appliance is designed to ensure low heating loads in the combustion chamber, low superficial loads and low NOx emissions (with Low NOx burners).

- **Boiler body:** is made of a cylindrical shell and a wet back furnace, dished and butt welded tube plates, made of high quality steel. All the materials have certificates attesting their chemical and mechanical characteristics, the controls are carried out during each production stage, and, theirs suitability for use as well. The welding seams are carried out by qualified personnel in compliance to certified procedures and are subjected to Non Destructive Tests, in accordance to an internal "Manufacturing and Control" program. Once the boilers have been manufactured they are subjected to hydraulic testing in accordance to the requirement 7.4 – Annex I, laid down in the Directive 2014/68/UE (PED).
- **Smoke tubes:** made of high quality steel, are welded to tube plates, and are without helical turbulators.
- **Reversing chamber:** is built in welded steel plate, completely water-cooled, and connected to the rear smoke-box with supports and manhole.
- **Front smoke-box:** is built in welded steel plate, completely cladded internally with a layer of insulation material and with a layer of high density refractory material. Two doors for cleaning and inspection are fitted with hinges to be quickly opened. Close to the burner hole is present a self-cleaning sight glass for combustion control during boiler operation.
- **Rear smoke-box:** is built in welded steel plate, completely cladded internally with a layer of insulation material and with a layer of high density refractory material. Two doors for cleaning and inspection are fitted with hinges to be quickly opened. Complete with an horizontal chimney connection with a diameter sized to the boiler's output, and a self-cleaning sight glass for combustion control. The rear smoke-box can be accessorized with and external economizer.
- **Basement:** is built with a steel frame, welded to the tube plates and closed with steel plates.
- **Walkway:** positioned on the top part of the boiler, is made of steel, covered with chequered plate and completed; on request with handrail and access ladder.
- **Insulation:** the shell is thermally insulated with a 100 mm rock wool cladding binded with high density, thick thermosetting resins, suitably supported and covered externally in 10/10 thick enamelled aluminum.

Standard equipment: [2]

- Steam main globe valve
- n. 2 spring loaded safety valves
- n. 2 reflecting level indicators, with flanged connections, purging and cut-off cocks
- Control board panel IP55 400V - 3+N - 50Hz complete with:
  - n. 1 large manometer with 3 way cock for manometer calibration
  - n. 1 safety pressure switch with manual reset onto the board panel, CE PED certified
  - n. 1 limit working pressure switch
  - n. 1 regulation pressure switch for two stages burners or probe for modulating burners
  - n. 2 safety minimum level switches, with auto-diagnosis and manual reset on the board panel, CE certified
  - n. 2 water level probes for ON-OFF pump regulation
- Feeding group complete with 2 vertical multistage centrifugal pumps
- Valve assembly for feeding circuit, with relevant pipes already fitted.
- Automatic group for level control
- n. 1 manual bottom blowdown valve
- Man-hole on top and hand-hole on water side
- Integral steam drier for high steam quality
- Blind burner plate
- Lifting lugs
- Document folder enclosing:
  - Manufacturer's Declaration of Conformity in compliance with the Annex VII of the European Directive 2014/68/UE (PED)
  - Installation, operation and service manuals
  - Certificates of safety components
  - Control board's electric schemes and related Declaration of Conformity
  - Water characteristics: requirements concerning the quality of water supply, the water in the boiler, frequency and type of sample tests to do.

Options:

- Kit of a "Second boiler water feeding pump"
- Kit of "maximum safety level"
- Kit TDS (Total Dissolved Salts)
- Kit of "Automatic de-sludging" (Blow down)
- Kit "72 hr" Supplied with electronic board panel Unical, model IML (Industrial Multi Logic)
- External Kit economizer and modulating boiler water feeding group
- Pre-drilled burner plate according to request
- Oil or Gas fired burner
- Ladder and walkway

Special versions for all models

TRYPASS' 24 hr / 72 hr

- equipped with "IML board panel" to obtain the certification for operation "without continuous surveillance" up to a maximum of 24 hr.
- equipped with "IML board panel" and "Kit 72 hr" to obtain the certification for operation "without continuous surveillance" up to a maximum of 72 hr.

(1) This value is intended without economizer and may change according working pressure and load conditions.
(2) The quantity and the model may vary according to the configuration.

MAIN COMPONENTS

1. Boiler body
2. Front doors
3. Rear doors
4. TDS - Salinity control group (optional)
5. Instruments assembly
6. Level safety sensors
7. Economizer (optional)
8. Steam valve
9. Safety valves
10. BBD automatic bottom drain (optional)
11. Pump feeding group
12. Water inlet thermometer
13. Level gauge

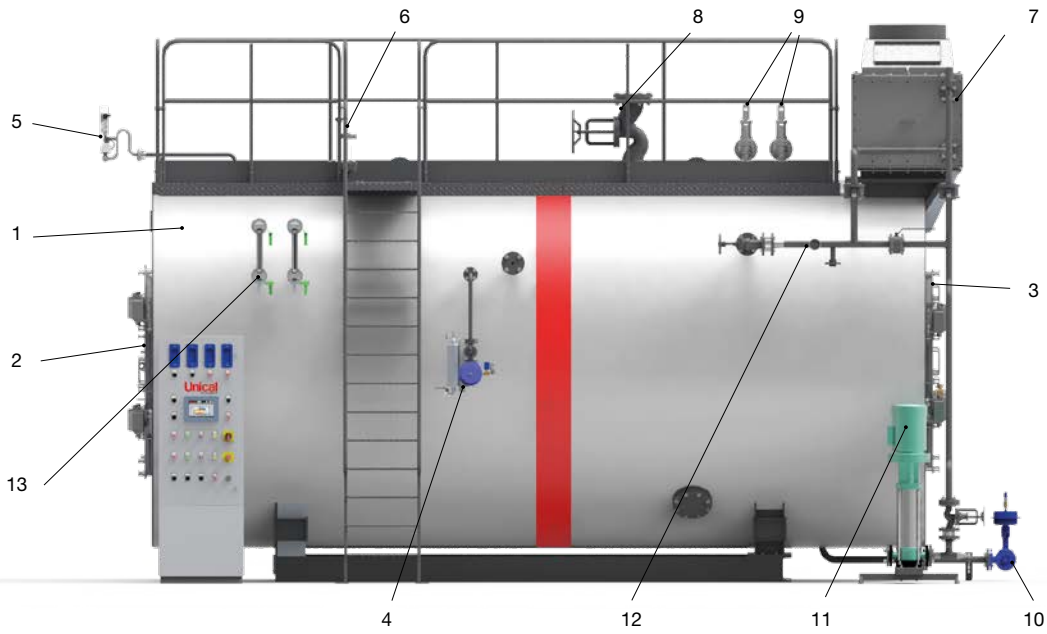

TECHNICAL DATA

Model	Steam production *	Nominal output	Furnace power	ΔP smoke side	Max. working pressure **	Water content at level	Total volume	Min buffer length
	kg/h	kW	kW	mbar	bar	lt	lt	mm
2000	2000	1328	1476	6	12	5100	6200	400
2500	2500	1660	1845	5	12	6100	7400	400
3000	3000	1992	2214	5.5	12	7200	8700	400
3500	3500	2325	2583	5	12	7400	9000	400
4000	4000	2657	2952	6	12	8700	10500	400
5000	5000	3321	3690	6.5	12	9300	11500	400
6000	6000	3985	4428	7	12	11000	13000	400
7000	7000	4649	5166	8.5	12	11500	14000	400
8000	8000	5313	5905	7	12	12800	15500	400
10000	10000	6643	7381	8	12	15200	19000	400
12000	12000	7971	8857	8.5	12	15700	21000	400
15000	15000	9964	11071	12.5	12	20500	25200	400
18000	18000	11957	13286	10	12	26000	33000	400
20000	20000	13286	14762	13.5	12	28500	36000	400
25000	25000	16607	18452	12	12	27900	35860	400

*with feeding water temperature = 95°C and pressure = 12 bar **safety valves setting value

PRODUCT PLUS VALUES

- **EXCELLENT EFFICIENCY**
  thanks to the three real smoke passes
- **LOW NO_x EMISSIONS**
  Thanks to the reduction of the specific thermal load according to the different versions
- **EFFICIENT THERMAL INSULATION**
  given by:
  - high total thickness, made by joining two rock wool layers with aluminium foil
  - insulation between the casing and the hot parts of the boiler body for thermal bridges elimination
- **CLEANING DOORS**
  front and rear doors for inspection and cleaning of the tubes
- **LADDER AND PLATFORM**
- **SIMPLIFIED ELECTRICAL CONNECTION**
  via fast coupling connectors
- **BOARD PANEL**
  electromechanical and electronic, expandable with options
- **POSSIBLE COMBINATION**
  with one, two, three stage or modulating burners
- **IMPLEMENTABLE FUNCTIONS**:
  boiler and board panel designed for the integration of optional kits, also with boiler already installed.

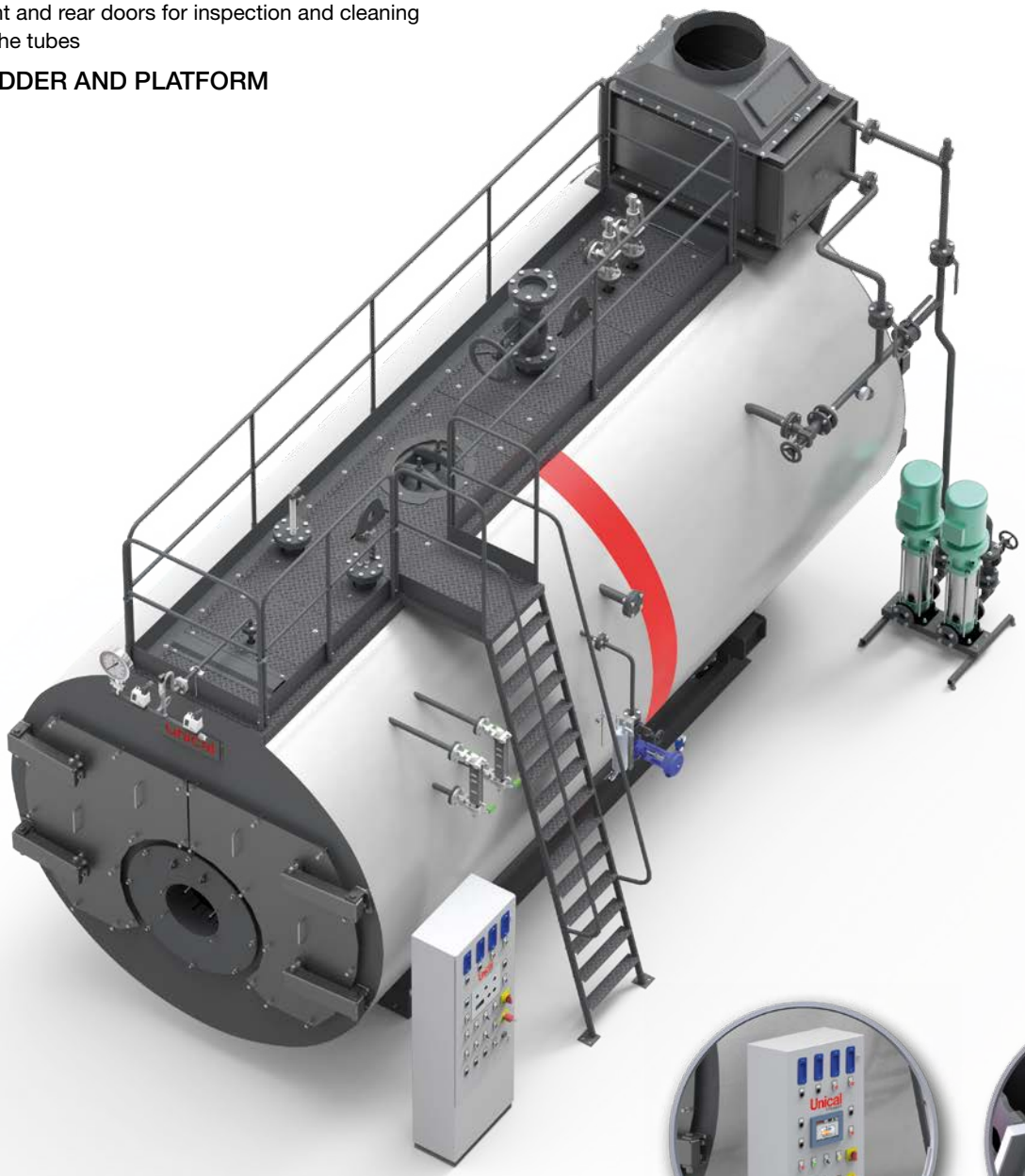

IML Board panel
(optional)

Fast coupling
connections

DIMENSIONS

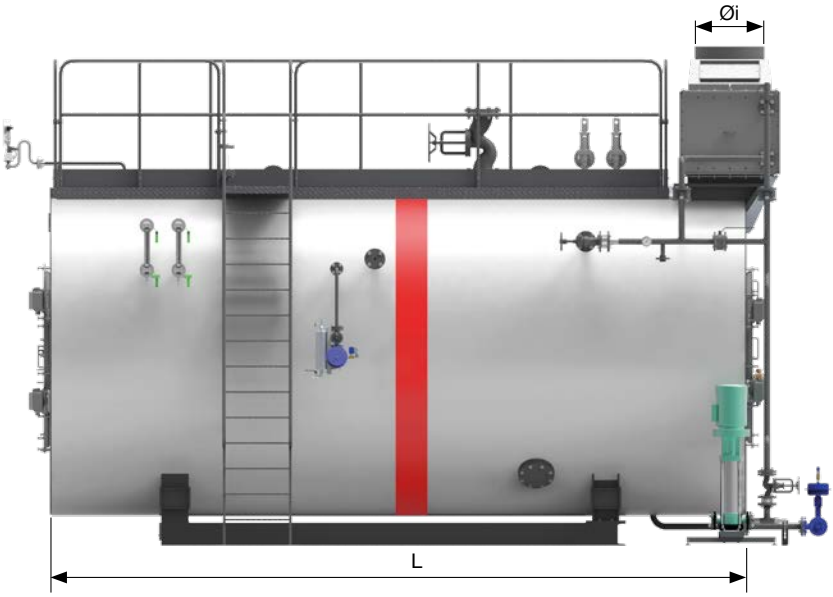

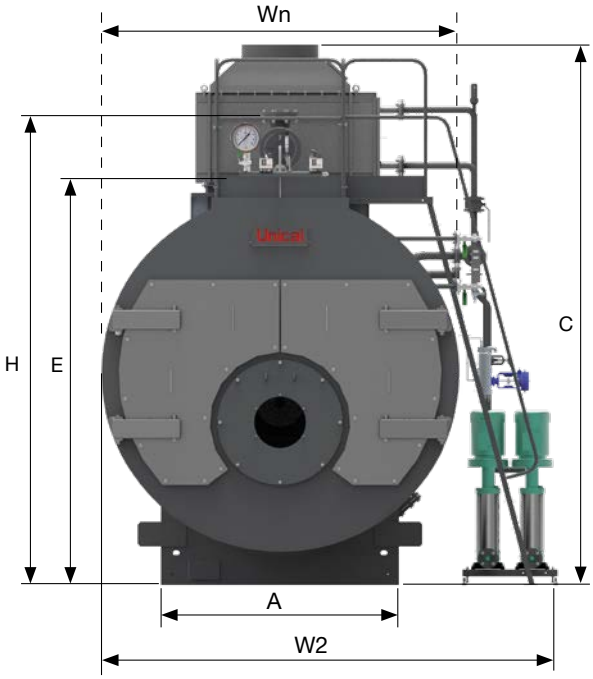

Model	Wn	W2	L	H	A	C	E	Øi	Empty Weight
	mm	mm	mm	mm	mm	mm	mm	mm	kg
2000	2250	2920	4100	2900	1440	3400	2600	401	8100
2500	2250	2920	4300	2900	1440	3400	2600	401	9000
3000	2250	2920	4750	2900	1440	3400	2600	451	9800
3500	2250	2920	5000	2900	1440	3400	2600	451	11500
4000	2340	3020	5200	3050	1570	3490	2690	501	14000
5000	2340	3020	5300	3050	1570	3490	2690	501	15000
6000	2600	3320	5600	3400	1725	3850	2950	551	16000
7000	2600	3320	6100	3400	1755	3850	2950	651	17500
8000	2760	3380	6400	3595	1755	4010	3110	701	19000
10000	2760	3380	6700	3595	1755	4010	3110	701	23000
12000	3000	3965	7300	3835	2000	4250	3350	801	28000
15000	3000	3965	8500	3835	2000	4250	3350	801	35000
18000	3400	4270	9000	4350	2300	4650	3750	951	40000
20000	3400	4270	9400	4350	2300	4650	3750	951	43000
25000	3600	4500	9900	4550	2500	4850	3950	1001	55000

BASIC BOARD PANEL

- One and two stage burner regulation
- ON / OFF level regulation
- N. 2 safety level switches on low level
- N. 1 PED safety level switch on low level
- Terminal strip on fast coupling connectors
- Expandability through optional kits
- Electrical protection degree IP 55

Regualtion simplicity

The boiler regulation is committed to a board panel with electromechanical components that allows to obtain numerous advantages, among which:

- Simple use;
- Kit fitting:
  - high level
  - management of a second water feeding pump

Installation

The board panel is supplied with fast multi-pole connections that simplify the installation on to the boiler.

Safety

- The board panel allows the automatic regulation of the steam boiler;
- On the board panel are fitted the components that allow, if necessary, the manual operation of the steam boiler.

IMC (Industrial Multi Cabling) BOARD PANEL

- One and two stage burner regulation
- ON / OFF level regulation
- N. 2 PED safety level switches on low level
- Terminal strip on fast coupling connectors
- Expandability through optional kits
- Electrical protection degree IP 55

Simplicity and functionality

The boiler regulation is committed to a board panel with electromechanical components that allows to obtain numerous advantages, among which:

- simple use;
- complete control of all the requested functionalities;
- mounting of numerous optional kits.

The “IMC” system is made with components that allow a modular management. The harness is so designed that the system can operate in many configurations.

Installation

The board panel is supplied with fast multi-pole connections that simplify the installation on to the boiler.

Safety

- The board panel allows the automatic regulation of the steam boiler.
- It is configurated for the alarms signalling; the management of the boiler safety devices is designed according to the rules in force.
- On the board panel are fitted the components that allow, if necessary, the manual operation of the steam boiler.

IML (Industrial Multi Logic) BOARD PANEL

- Regulation PLC
- Touch screen 7” display with graphic interface
- One, two, three stage or modulating burner
- ON / OFF or modulating level regulation with valve or with inverter
- N. 2 PED safety level switches on low level
- Terminal strip on fast coupling connectors
- Expandability through optional kits
- Electrical protection degree IP 55

Simplicity and functionality

The boiler regulation is committed to a board panel with electromechanical components that allows to obtain numerous advantages, among which:

- operation with multiple logic;
- simple use;
- efficient regulation;
- complete control of all the requested functionalities;
- approval for 24/72 hr operation w/o continuous surveillance.

The “IML” system is made with components that allow a modular management. The harness is so designed that the system can operate in many configurations.
The main aesthetic novelty is the matching of the signalling bulbs for the operation and safety, with a touch-screen display and the synoptic representation of the boiler.
The use of a programmable electronic device through PLC, allows to attain a high complexity in the boiler operation logic, guaranteeing a more intelligent and complete management.
The electronic unit is endowed of several inputs and outputs that can control, at the same time, several boiler functions and in a more articulated manner, if compared with an electromechanical board panel.
The board panel manages completely all the operational and safety parameters during the operation periods, without continuous surveillance up to a maximum of 72 hrs.

User interface with touch-screen display

The use of a graphic display allows to show, on the main page of the menu, the steam boiler in operation with the scheme of the main control devices. The touch-screen display allows to use virtual direct access keys to the setting and regulation pages. So, the graphic representation through symbols, results intuitive and of easy use.

Hardware and system expandability

The basic system is composed of:

- central unit (CPU)
- user interface (display)
- module of additional inlets

The display is the user interface and acts both, as an output device (visualization and signalling) and an input (commands entering).

The central unit is prearranged for the connection to additional expansion units.
The expansion allows:

- to perform boiler cascade systems (with master-slave logic);
- to connect the steam boiler to a supervision system (SCADA);
- to connect the control via GSM for the remotation of alarm signals;
- to control other devices present in the system (with more additional modules);
- to update the software per “upgrading” or modifications to the system.

Modulation

The IML board panel allows the management of the modulating burner without the need of the burner modulating kit; furthermore, it allows the level modulation through the signal coming from the capacitive sensor factory fitted.

Service

The IML board panel allows the function of the “guided service” (SAFE SERVICE) for performing the routine controls by the person authorised to the operation, at the expiring of the without surveillance operation period. The controls results are stored in an internal database, transferable on an archives through USB port on the L.H. side panel.

Installation

The board panel is supplied with fast multi-pole connections, that make easy the installation on to the steam boiler.

Safety

- The electronic regulator replaces only the regulation components;
- The board panel is set for the alarm signalling on the display; the management of the boiler safety devices remains of electromechanical type.
- On to the board panel are also fitted the components that allow, if necessary, the manual operation of the steam boiler.

BOARD PANELS COMPARISON TABLE

DESCRIPTION FUNCTIONS			BASIC	IMC	IML
Elettromechanical components for regulation and safeties			•	•	•
Regulation with PLC			-	-	•
Graphical user interface with 7" touch screen display			-	-	•
Fast connection terminal			•	•	•
Electrical prearrangement for kits mounting			-	•	•
Forced and thermostat controlled cooling system			-	•	•
Differentiated management of the boiler with economiser installed			-	-	•
First controlled water filling mode			-	-	•
Boiler starting mode from cold			-	-	•
Burner	Pressure transducer		-	-	•
	Pressure continuous visualization		-	-	•
	One stage		•	•	•
	Two stage		•	•	•
	Three stage		o	o	•
	Modulating (3 points)		- (1)	- (1)	•
	Modulating (analogic+feed back signal)		- (1)	- (1)	•
Level	Capacity sensor level transducer		-	o	•
	Continuous visualization of water level		-	-	•
	Pump manual operation function		•	•	•
	Water feeding pump ON/OFF regulation		•	•	•
	Modulating regulation with solenoid valve (3 points)	KIT MODUL V	-	o	•
	Modulating regulation with pneumatic valve (analogic+feed back signal)	KIT MODUL V	-	o	•
	Modulating regulation with inverter	KIT INVERTER	-	o	o
	Second water feeding pump control	Kit 2nd POMPA	o	o	o
	Automatic changeover between 1st & 2nd pump for load & consumption sharing	Kit 2nd POMPA	-	-	o
	Pump 2 manual operation function	Kit 2nd POMPA	o	o	o
	1st safety low water level control, PED approved		•	•	•
	2nd safety low water level control, PED approved		•	•	•
	Software safety limit for high water level		-	-	•
	Safety basic level switch for high water level	KIT HWL std	o	o	o
	Safety PED approved level switch for high water level	KIT HWL	o	o	o
TDS	Adjusting and safety system for the salt quantity dissolved in the boiler water	KIT TDS1	-	o	o
	Adjusting and safety system for the salt quantity dissolved in the boiler water equipped with self cleaning sensor	KIT TDS2	-	o	o
Drain	Time controlled drains with desludging function	KIT BLOW DOWN	o	o	o
Remote control	Alarm signal remotation	KIT REMOTE ALARM	-	o	o
	Via cable remote control system	KIT REMOTE CONTROL	-	-	o
	Via WEB remote control system	KIT WEB CONTROL	-	-	o
Service	Supervision for ordinary service works		-	-	•
	Supervision for extra-ordinary service works		-	-	•
Management	Exemption from continuous suveillance up to 24 hrs		-	o	o
	Exemption from continuous suveillance up to 72 hrs		-	o	o
	Total exemption (only for BAHR'UNO boilers)		-	o	o

LEGENDA	
-	NOT AVAILABLE
o	OPTIONAL
•	STD. SUPPLIED

Notes:
(1) Possible with external burner regulator

KIT COMPOSITION

for	BAHR'UNO	BAHR'12
	BAHR'12 3G	TRYPASS'
with	IMC	IML

KIT HWL std

high water level safety sensor

Kit Composition

- Nr. 1 electrode type sensor for high water level safety alarm

for	BAHR'UNO	BAHR'12	TRYPASS'
with	IMC	IML	

KIT HWL

"Fail safe", safety maximum water level switch, CE PED certified

Kit Composition

- Nr. 1 safety sensor 1/2" connection
- Nr. 1 sensor electrode in stainless steel
- Nr. 1 Safety regulator with self-diagnosis
- Electrical components

KIT COMPOSITION

KIT TDS 1

Salinity control group

for	BAHR'UNO	
with	IMC	IML

Kit Composition

Boiler water salinity control group through sensor for electrical water conductivity, made of:

- Conductivity sensor
- Flanged connecting pipe
- Gate valve
- Surface drain valve pneumatically actuated on high salinity/conductivity values
- Gasket
- Electrical kit with selectors and basic electronic regulator

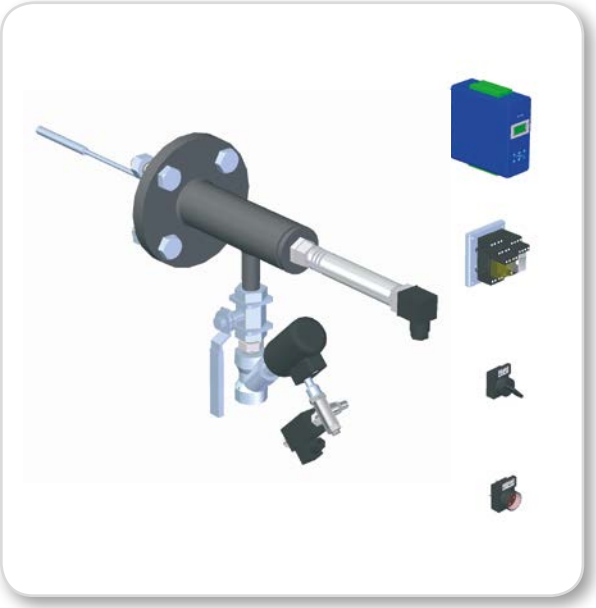

KIT TDS 2

Salinity control group

for	BAHR'UNO	
with	IMC	IML

Kit Composition

Boiler water salinity control group through sensor for electrical water conductivity, made of:

- Self cleaning conductivity sensor with temperature compensation for measurement of TDS
- Flanged connecting pipe
- Gate valve
- Surface drain valve pneumatically actuated on high salinity/conductivity values
- Gasket
- Electrical kit with selectors and advanced electronic regulator

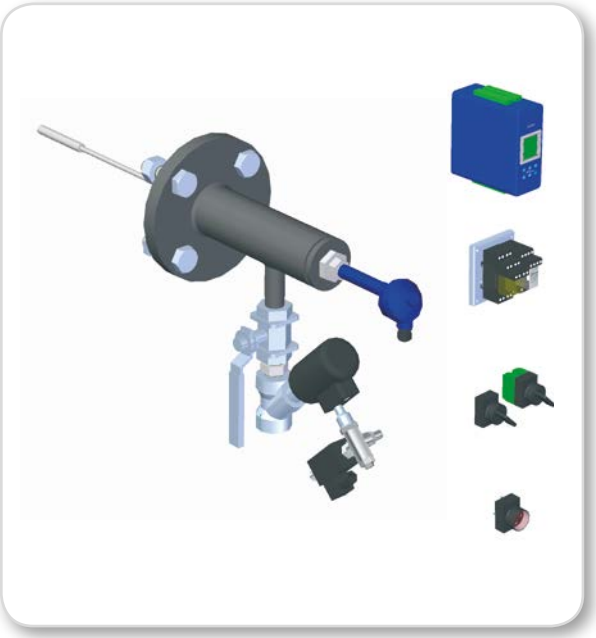

KIT COMPOSITION

KIT TDS 1

for	BAHR'12	BAHR'12 3G	TRYPASS'
with	IMC	IML	

Salinity control group

Kit Composition

Boiler water salinity control group through sensor for electrical water conductivity, made of:

- Conductivity sensor
- Flanged connecting pipe
- Gate valve
- Surface drain valve pneumatically actuated on high salinity/conductivity values
- Gaskets
- Counterflange
- Electrical kit with selectors and basic electronic regulator

KIT TDS 2

for	BAHR'12	BAHR'12 3G	TRYPASS'
with	IMC	IML	

Salinity control group

Kit Composition

Boiler water salinity control group through sensor for electrical water conductivity, made of:

- Self cleaning conductivity sensor with temperature compensation for measurement of TDS
- Flanged connecting pipe
- Gate valve
- Surface drain valve pneumatically actuated on high salinity/conductivity values
- Gaskets
- Counterflange
- Electrical kit with selectors and advanced electronic regulator

KIT COMPOSITION

KIT BLOW DOWN

for	BAHR'UNO
with	IMC

Boiler bottom automatic drain group

Kit composition

Automatic drain group, controlled by timer cycles with desliming function, made of:

- 90° gate valve
- Fast opening pneumatic valve
- Gaskets and counterflange
- Electrical kit (for IMC*)

*to be combined with KIT TDS 2

KIT BLOW DOWN

for	BAHR'UNO
with	IML

Boiler bottom automatic drain group

Kit composition

Automatic drain group, controlled by timer cycles with desliming function, made of:

- 90° gate valve
- Fast opening pneumatic valve
- Gaskets and counterflange
- Electrical kit (for IML)

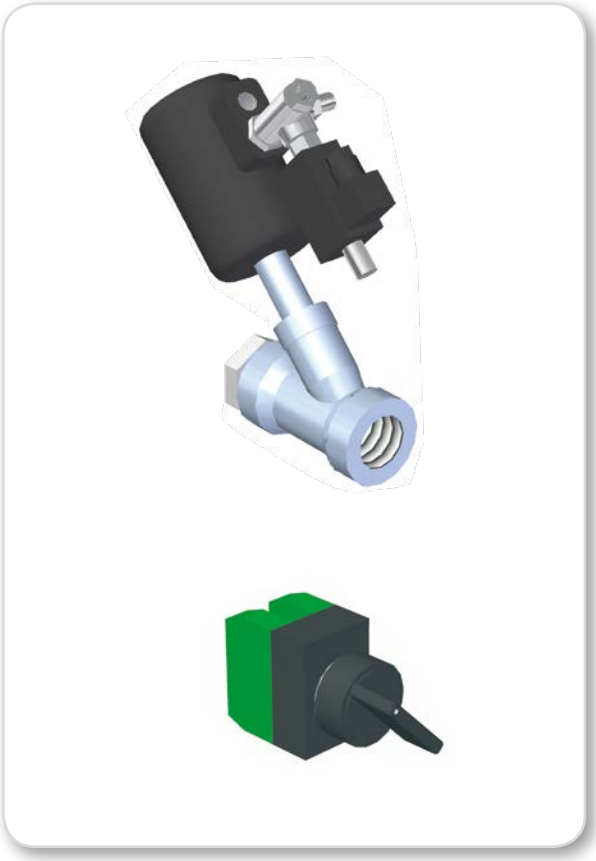

KIT BLOW DOWN

for	BAHR'12	BAHR'12 3G	TRYPASS'
with	IMC		

Boiler bottom automatic drain group

Kit composition

Automatic drain group, controlled by timer cycles with desliming function, made of:

- 90° gate valve
- Fast opening pneumatic valve
- Gaskets and Counterflange
- Electrical kit (for IMC*)

*to be combined with KIT TDS 2

KIT BLOW DOWN

for	BAHR'12	BAHR'12 3G	TRYPASS'
with	IML		

Boiler bottom automatic drain group

Kit composition

Automatic drain group, controlled by timer cycles with desliming function, made of:

- 90° gate valve
- Fast opening pneumatic valve
- Gaskets
- Counterflange
- Electrical kit (for IML)

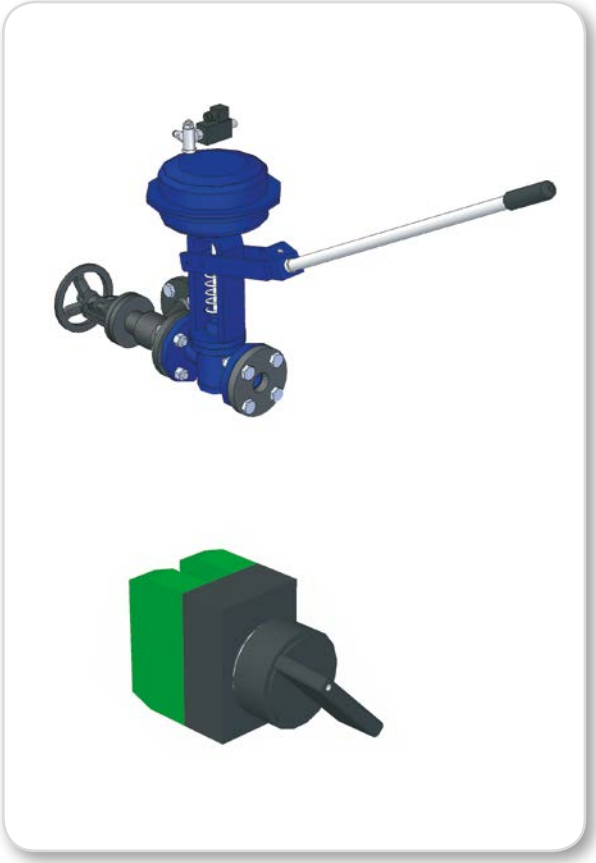

KIT COMPOSITION

for	BAHR'UNO		
with	BASIC	IMC	IML

KIT 2nd PUMP

Kit second boiler water feeding pump

Kit composition

- A 2nd three phase 400V / 50 Hz motor pump
- Basement with vibration-damping feet
- Check valve
- Gate valve
- Fitting pipe

for	BAHR'12	BAHR'12 3G	TRYPASS'
with	BASIC	IMC	IML

KIT 2nd PUMP

Kit second boiler water feeding pump

Kit composition

- A 2nd three phase 400V / 50 Hz motor pump
- Basement with vibration-damping feet
- Check valve
- Gate valve
- Fitting pipe
- Gaskets
- Counterflange for feeding water connection

KIT COMPOSITION

for	BAHR'UNO	
with	IMC	IML

KIT EC (gas) / KIT EC (light oil)

Economizer kit
Efficiency increase: +3%

Kit composition

- Exchange battery with carbon steel finned pipes
- Modulating valve
- Transformation piping
- Thermometer

for	BAHR'12	BAHR'12 3G
with	IMC	IML

KIT EC (gas) / KIT EC (light oil)

Economizer kit[1]
Efficiency increase: +4%

Kit composition

- Exchange battery with carbon steel finned pipes
- Modulating valve (Inverter as per model 2000)
- Transformation piping
- Thermometer

(1) Inverter as per model 2000

for	TRYPASS'	
with	IMC	IML

KIT EC (gas) / KIT EC (light oil)

External economizer kit
Efficiency increase: +5%

Kit composition

- Exchange battery with carbon steel finned pipes
- Kit Inverter (IML) / Kit Modul V (IMC)
- Transformation piping
- Thermometer

KIT COMPOSITION

for	BAHR'UNO
with	IMC

KIT MODUL V

Water level modulation

Kit composition

- Tank and level capacitive sensor
- Solenoid valve for flow rate adjustment
- Connection piping
- Electrical kit for IMC

for	BAHR'UNO
with	IML

KIT MODUL V

Water level modulation

Kit composition

- Tank and level capacitive sensor
- Solenoid valve for flow rate adjustment
- Connection piping

KIT COMPOSITION

for	BAHR'12	BAHR'12 3G	TRYPASS'
with	IMC		

KIT MODUL V
Water level modulation

Kit composition

- Tank and level capacitive sensor
- Pneumatic valve for flow rate adjustment
- Connection piping
- Electrical kit for IMC

for	BAHR'12	BAHR'12 3G	TRYPASS'
with	IML		

KIT MODUL V
Water level modulation

Kit composition

- Tank and level capacitive sensor
- Pneumatic valve for flow rate adjustment
- Connection piping

for	BAHR'12	BAHR'12 3G	TRYPASS'
with	IML	IMC	

KIT MODUL INVERTER
Water level modulation

Kit composition

- Additional inverter board panel

KIT COMPOSITION

KIT SAMPLE COOLER

for	BAHR'12	BAHR'12 3G	TRYPASS'

Water samples cooling group

Samples of boiler water need to be analysed on a regular basis to check if its values are within correct parameters.
Bad water quality is a major cause of boiler damages.
Sample cooler is necessary to take samples safely cooling them down; it suppresses flash steam also, ensuring accurate samples.

The cooler consists of a stainless steel coil, through which the sample flows, and a stainless steel body, through which cooling water flows in the opposite direction.

Kit composition

The cooler is composed by the following parts:

- Stainless steel cooler
- Sample inlet valve
- Cooling water inlet valve
- Connection piping

KIT DRY RUN PROTECTION

for	BAHR'12	TRYPASS'
with	IMC	IML

Protection against dry operation of the water pump

Kit composition for one pump

- Nr. 1 Pressure switch and fitting
- Electrical kit for IMC/IML

Kit composition for two pumps

- Nr. 2 Pressure switches and fittings
- Electrical kit for IMC/IML

ANTI-FLOODING KIT

for	BAHR'UNO		BAHR'12
	BAHR'12 3G		TRYPASS'
with	BASIC	IMC	IML

Anti-flooding protection during cooling down / pressure drop

Kit composition

- Angle shut-off valve
- Pneumatic valve
- Electric harness

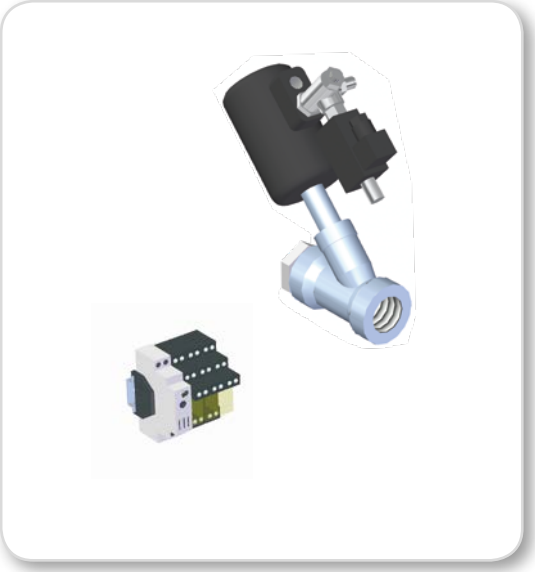

KIT COMPOSITION

for	BAHR'UNO	BAHR'12
	BAHR'12 3G	TRYPASS'
with	IMC	IML

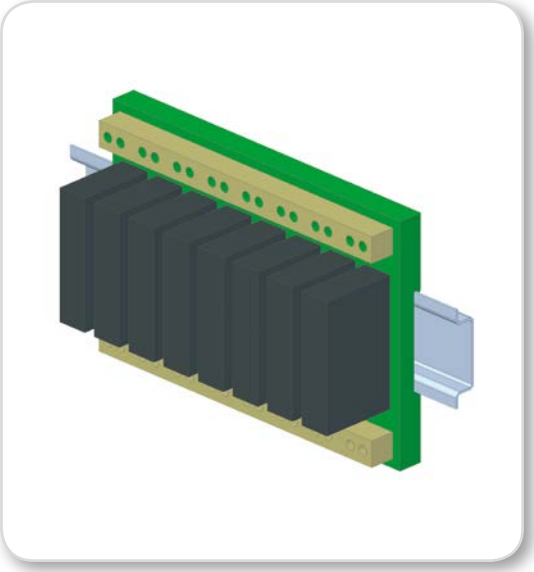

KIT REMOTE ALARM

Alarms remotation

Kit composition

- Relay PCB with wiring harness interface

for	BAHR'UNO	BAHR'12
	BAHR'12 3G	TRYPASS'
with	IML	

KIT REMOTE WEB CONTROL 3G

Kit composition

- Ethernet Router - 4 ports / modem 3G
- Antenna
- Connecting cables for touch-screen and PLC

for	BAHR'UNO	BAHR'12
	BAHR'12 3G	TRYPASS'
with	IML	

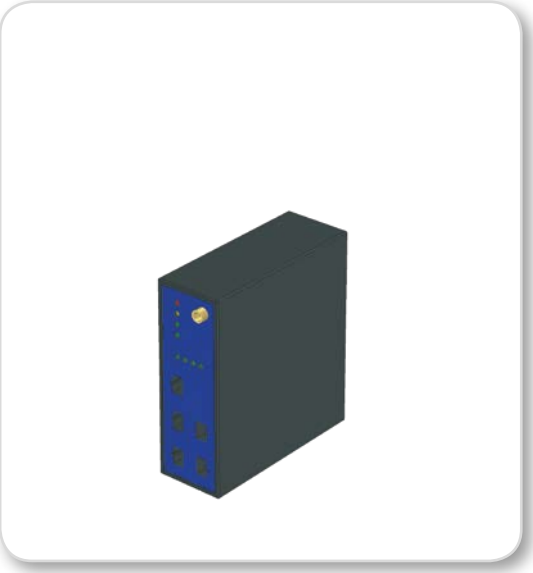

KIT REMOTE WEB CONTROL ADSL

Kit composition

- Ethernet Router - 4 ports / modem ADSL
- Connecting cables for touch-screen and PLC

SRC OR

CONDENSATE COLLECTOR TANK FOR STEAM BOILERS IN STAINLESS STEEL						
RANGE	from 200 to 5000 liters					
EXECUTION	vertical (horizontal on request)					
WORKING PRESSURE	atmospheric					
MAX. WORKING TEMPERATURE	90°C					
MODELS	200	300	500	800	1000	1500
	2000	2500	3000	4000	5000	-

DESCRIPTION

Feed water tank

Reservoir of feeding water for steam boiler, predisposed for the collection and the storage of the condensate, and for the eventual refill of treated water.
Execution in vertical cylindrical shape.
It is mounted on a stable steel support device and designed for installing either at ground level or at higher level to avoid the cavitation phenomenon.
The mix of the condensate return and the chemically treated water is automatic.
Insulated with soft polyurethane 50 mm and covered of PVC.

The tank is composed by the following groups:

- Feed water tank made of stainless steel AISI 304.
- Level indicator.
- Floating level regulation valve.
- Air vent.
- Overflow.
- Drain.
- Water connection to steam boiler.

TECHNICAL DATA

Model	Max operating temperature	Total volume
	°C	l
200	90	200
300	90	300
500	90	500
800	90	800
1000	90	1000
1500	90	1500
2000	90	2000
2500	90	2500
3000	90	3000
4000	90	4000
5000	90	5000

DIMENSIONS

Model	W	H	Discharge valve	Check valve	Empty weight
	mm	mm	DN/in	DN/in	kg
200	550	1430	1"1/4	1/2"	36
300	650	1470	1"1/4	1/2"	45
500	700	1900	1"1/4	1/2"	60
800	890	1880	1"1/4	1/2"	82
1000	900	2150	1"1/4	1/2"	90
1500	1100	2370	1"1/4	1/2"	130
2000	1300	2240	1"1/4	3/4"	168
2500	1300	2530	1"1/4	3/4"	204
3000	1350	2750	1"1/4	3/4"	255
4000	1500	2850	1"1/4	1"	340
5000	1700	2870	1"1/4	1"	415

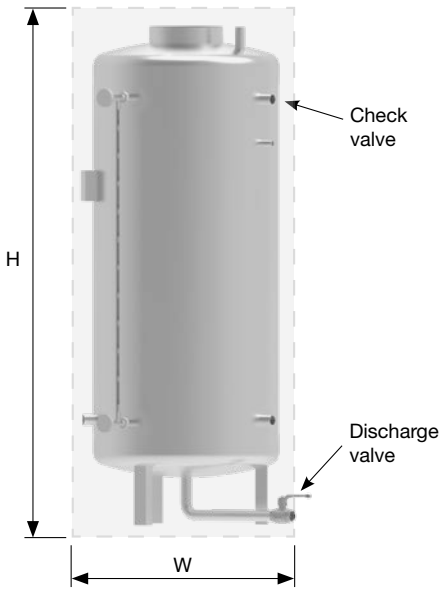

SRC

CONDENSATE COLLECTOR TANK FOR STEAM BOILERS IN CARBON STEEL (in stainless steel on request)						
RANGE	from 500 to 16000 liters					
WORKING PRESSURE	atmospheric					
MODELS	500	1000	1500	2000	2500	3000
	4000	5000	8000	10000	16000	-

DESCRIPTION

Feed water tank

Reservoir of feeding water for steam boiler, predisposed for the collection and the storage of the condensate, and for the eventual refill of treated water.
Execution in horizontal cylindrical shape, with convex end-plates.
It is mounted on a stable steel support device and designed for installing either at ground level or at higher level to avoid the cavitation phenomenon.
Complete with an electronic water level management system and related alarms (low and high levels).
The mix of the condensate return and the chemically treated water is automatic.
Insulated with high-density rock wool and covered with embossed aluminum foil.

The tank is composed by the following groups:

- Feed water tank made of steel
- Magnetic level indicator
- Probes for water level control
- Inlet water line with pneumatic valve
- Degassed hot water supply to boiler
- Air vent
- Overflow
- Drain
- Temperature gauge
- Pressure gauge
- Board panel IP55.

MAIN COMPONENTS

1. Tank
2. Board panel
3. Level indicator
4. Level regulation sensors
5. Thermometer
6. Manometer
7. Condensates return
8. Reinstatement water inlet
9. Drain

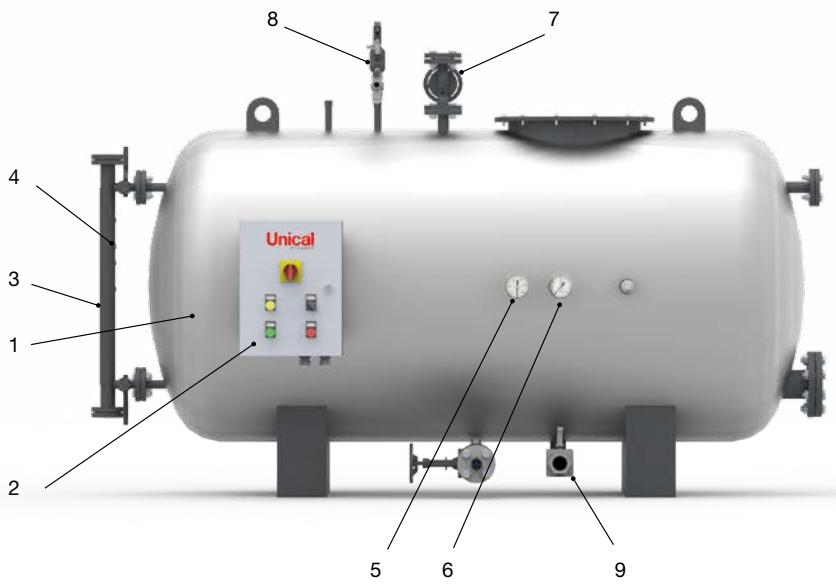

TECHNICAL DATA

Model	Water content at level	Total volume
	l	l
500	325	500
1000	650	1000
1500	975	1500
2000	1300	2000
2500	1625	2500
3000	1950	3000
4000	2800	4000
5000	3500	5000
8000	5600	8000
10000	7000	10000
16000	11200	16000

DIMENSIONS

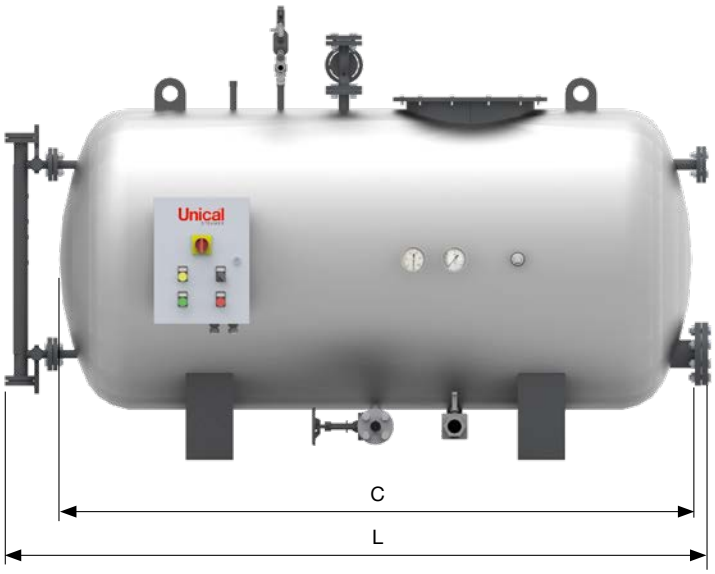

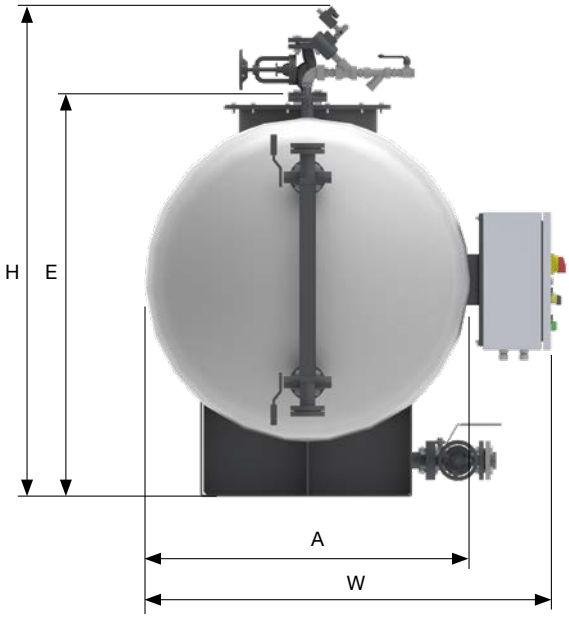

Model	W	L	H	A	C	E	Empty weight
	mm	mm	mm	mm	mm	mm	kg
500	1030	1970	1330	750	4560	1000	330
1000	1230	2400	1440	950	2000	1210	460
1500	1480	2315	1690	1200	1900	1460	515
2000	1570	1935	1845	1300	1880	1560	560
2500	1570	2990	1845	1300	2530	1560	665
3000	1650	3080	1915	1370	2630	1630	765
4000	1780	3060	2090	1500	2610	1760	950
5000	1980	3130	2300	1700	2650	2000	1060
8000	2070	4750	2420	1800	4125	2100	1630
10000	2070	5215	2500	1800	4625	2100	1740
16000	2370	5960	2810	2100	5560	2690	2430

BOARD PANEL

SRC

- ON/OFF regulation of water level in the reservoir
- Nr.1 low level signalling
- Nr.1 high level signalling
- Electrical protection degree IP55

DEAR

ATMOSPHERIC DEAERATOR FOR STEAM BOILERS IN CARBON STEEL (in stainless steel on request)						
RANGE	from 500 to 16000 liters					
WORKING PRESSURE	atmospheric					
WORKING TEMPERATURE	90÷95°C					
MODELS	500	1000	1500	2000	2500	3000
	4000	5000	8000	10000	16000	-

DESCRIPTION

Atmospheric deaerator for steam boilers.

The atmospheric deaerator is a steam heated feed water tank necessary for a (partial) deaeration process.
The steam, necessary to reduce the quantity of dissolved gases in the water, is injected through a sparging tube positioned in the lower part of the tank.
The steam injection is controlled, by an electromechanical thermostat set to the temperature of 95°C.
Execution in horizontal cylindrical shape, with convex end-plates, and mounted on a stable steel support device designed for installing at proper height to avoid the cavitation phenomenon.
Complete with an electronic water level management system and related alarms (low and high levels).
Insulated with high-density rockwool and covered with embossed aluminum foil.

Standard-production equipment:

- Deaerator tank made of steel
- Steam injection system
- Magnetic level indicator
- Probes for water level control
- Inlet water line with pneumatic valve and filter
- Condensate return inlet
- Degassed hot water supply to boiler
- Air vent
- Overflow
- Drain valve
- Temperature gauge
- Pressure gauge
- Board panel IP55.

MAIN COMPONENTS

1. Degassing tank
2. Board panel
3. Level indicator
4. Level regulation sensors
5. Thermometer
6. Manometer
7. Steam injection thermoregulation group
8. Condensates return
9. Reinstatement water inlet
10. Drain
11. Hot water flow to the steam boiler
12. Overflow connection

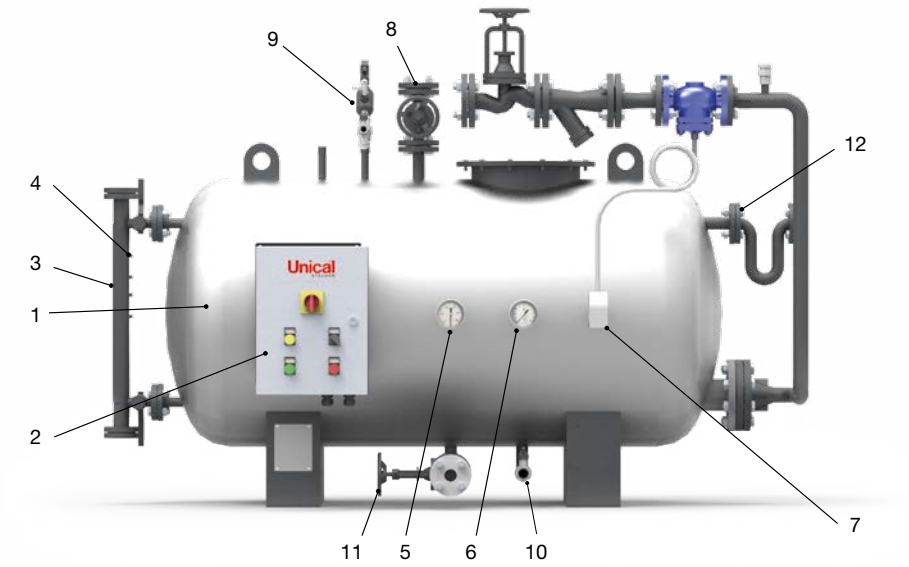

TECHNICAL DATA

Model	Water content at level	Total volume	Working temperature	Degassing capacity
	l	l	°C	l/h
500	325	500	90÷95	500
1000	650	1000	90÷95	1000
1500	975	1500	90÷95	1500
2000	1300	2000	90÷95	2000
2500	1625	2500	90÷95	2500
3000	1950	3000	90÷95	3000
4000	2800	4000	90÷95	4000
5000	3500	5000	90÷95	5000
8000	5600	8000	90÷95	8000
10000	7000	10000	90÷95	10000
16000	11200	16000	90÷95	16000

DIMENSIONS

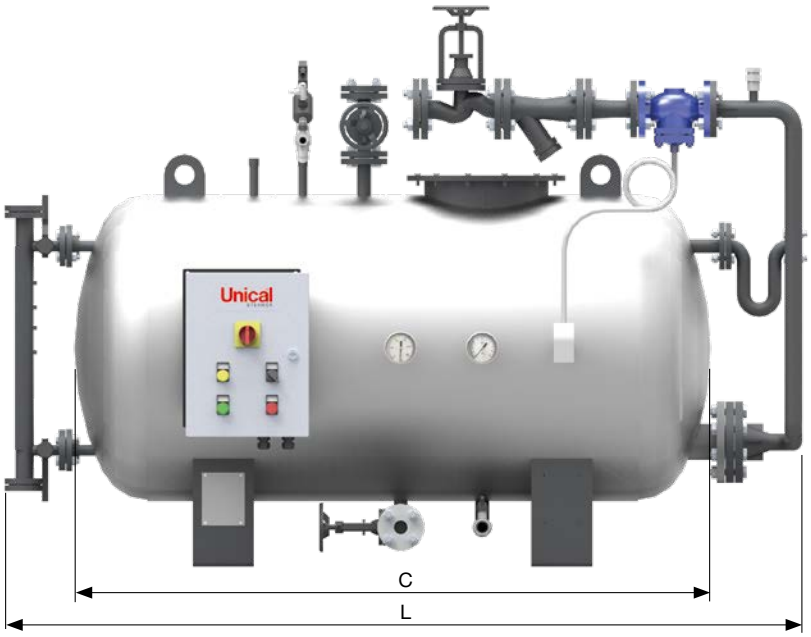

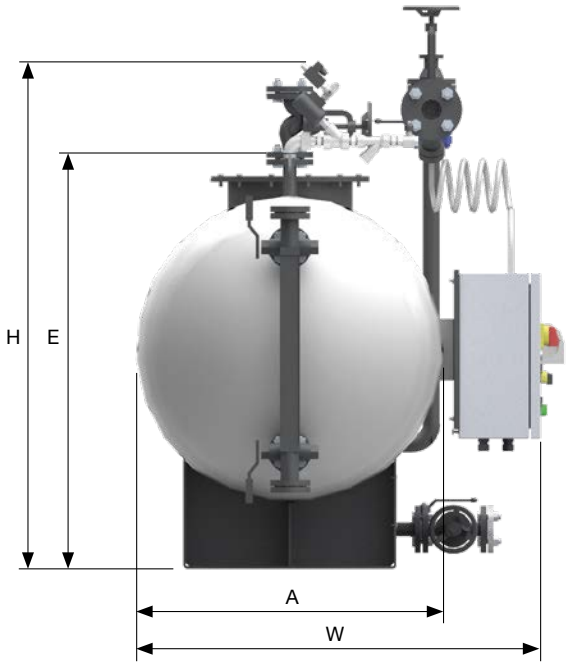

Model	W	L	H	A	C	E	Empty weight
	mm	mm	mm	mm	mm	mm	kg
500	1045	1970	1330	750	4560	1000	350
1000	1245	2400	1440	950	2000	1210	480
1500	1495	2315	1690	1200	1900	1460	535
2000	1585	1935	1845	1300	1880	1560	580
2500	1585	2990	1845	1300	2530	1560	685
3000	1665	3080	1915	1370	2630	1630	785
4000	1795	3060	2090	1500	2610	1760	970
5000	1995	3130	2300	1700	2650	2000	1080
8000	2085	4750	2420	1800	4125	2100	1650
10000	2085	5215	2500	1800	4625	2100	1760
16000	2385	5960	2810	2100	5560	2690	2450

BOARD PANEL

DEAR

- ON/OFF regulation of water level in the reservoir
- Nr.1 low level signalling
- Nr.1 high level signalling
- Electrical protection degree IP55

DEGASSING

The deaerator has the function to reduce the concentration of the corrosive gases O_2 and CO_2 dissolved in the feeding water of the boiler.
The dangerousness of these gases is, in fact, that combining themselves with other elements, such as the iron and other metals of the pressure vessel, can provoke corrosion. It is, therefore, fundamental to free the feeding water from these gases.
Since the solubility of the gases in the water reduces when the temperature increases, the problem's solution is to increase the feeding water temperature; the extreme case is represented by the water in evaporation, situation in which all the gases would be released (total de-aeration).
The following diagram shows the oxygen content dissolved in the water according to the pressure and the temperature. It can be noticed that at the boiling temperature of 105°C for an absolute working pressure of 1.2 bar we are in a zone where the O_2 content in the water is practically void.

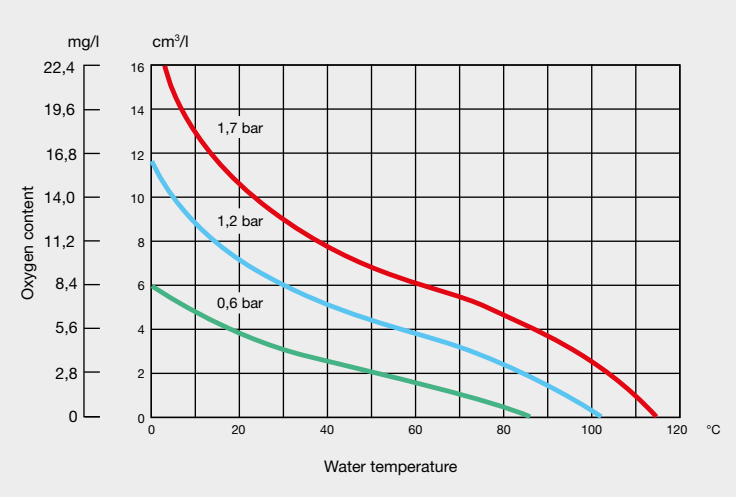

Atmospheric deaerator (Partial de-aeration)
In the partial de-aeration the process happens under atmospheric pressure; the atmospheric deaerator is connected to the atmosphere through a ventilation duct. It is the simplest thermal treatment form for the water deaeration.
The "hot" steam, necessary to remove the gases, is introduced through injectors positioned in the low part of the reservoir. The vapour feeding is controlled, in the simplest form, by an electromechanical thermostat adjusted to the temperature of 95°C.
The topping up of the fresh water is checked through an electronic level regulator.
This simple system is normally used in low capacity and low pressure installations.
NOTE: the thermo-physical de-aeration must always be coupled with a chemical de-aeration.

The deaerators of the DEAR series are deaerators of the atmospheric type for the degassing of the feeding water of the steam boilers. The appliance falls in the limits of application of the art. 3 par. 3 of the PED Directive 2014/68/UE.
The water temperature is checked and maintained through the thermometric system that checks the steam injection in the reservoir.
Endowed with steel basement that allows the installation at a level higher than 5 meters from the axle of the boiler feeding pumps, thus avoiding the cavitation phenomenon.
The deaerator is endowed with a water level management system, in mixing mode between the return condensates from the installation and the chemically treated reinstatement water.

The DEAR deaerator is composed by the following groups:

- Steam feeding group interlocked with a thermometric system (regulation through a thermo-regulating valve for the holding of the planned temperature).
- Magnetic level indicator, with 4 bi-stable contacts, opportunely positioned for the ON-OFF control of the water level in the tank and for the alarms of low and high level.
- Pneumatic valve on the entry water line
- Degassed water drawing group
- Air vent
- Overflow
- Drain
- Board panel

DETE

PRESSURIZED DEAERATOR FOR STEAM BOILERS IN CARBON STEEL*							
RANGE	from 1000 to 16000 liters						
DESIGN / WORKING PRESSURE	0.5 bar/0.4 bar						
WORKING TEMPERATURE	105°C						
MODELS	1500	3000	5000	8000	12000	15000	22000

*some of the internal components are made in stainless steel AISI 316 L

DESCRIPTION

Pressurized deaerator for steam boilers.

Pressurized deaerator tank, necessary for a thermal full deaeration of the feed water.
Best working conditions (temperature 105°C and internal pressure about 0.4 bar) are electronically controlled and managed.
The steam, necessary to remove the dissolved gases in the water, is introduced through injectors positioned in the lower part of the reservoir and, through a modulating valve, in the degassing tower as well.
Execution in horizontal cylindrical shape, with convex end-plates, and mounted on a stable steel support device designed for installing at proper height to avoid the cavitation phenomenon.
Complete with an electronic water level management system and related alarms (low and high levels).
Insulated with high-density rockwool and covered with embossed aluminum foil.
This devide undergoes the limits of application of the art. 3 par. 3 of the PED Directive 2014/68/UE.
NOTE: The pressurized deaeration must always be coupled with a chemical deaeration.

Standard-production equipment:

- Deaerator tank.
- Steam injection system.
- Magnetic level indicator.
- Probes for water level control.
- Inlet water line with pneumatic valve and filter.
- Condensate return inlet.
- Air vent.
- Overflow.
- Drain valve.
- Temperature gauge.
- Pressure gauge.
- Safety valve.
- Recyrculation pump.
- Steam inlet valve.
- Degassed hot water supply to boiler.
- Board panel IP55.

MAIN COMPONENTS

1. Deaerator tank
2. Board panel
3. Level indicator
4. Level regulation sensors
5. Thermometer
6. Manometer with testing cock
7. Regulation pressure switch
8. Safety valve
9. Degassing tower
10. Air vent
11. Reinstatement water inlet
12. Steam injection thermoregulation group
13. Water bypass
14. Steam bypass
15. Drain
16. Hot water flow to the steam boiler

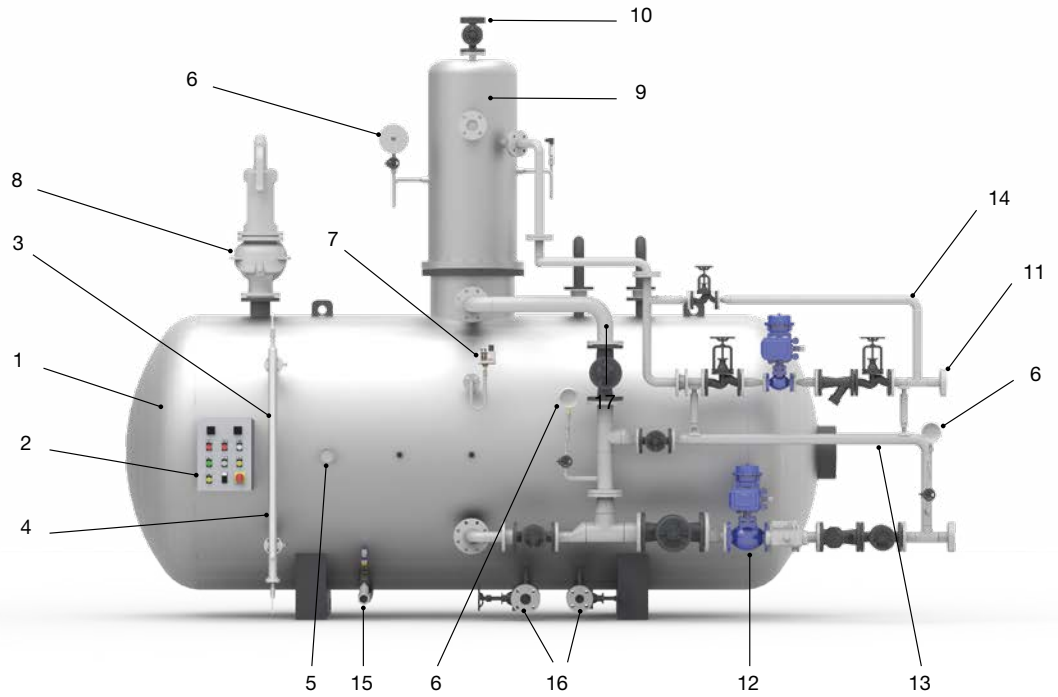

TECHNICAL DATA

Model	Min. degassed water flow	Max. degassed water flow	Nominal volume	Total volume	Feeding water pressure	Design pressure	Degassed water temperature
	kg/h	kg/h	m^3	m^3	bar	bar	°C
1500	300	1500	700	1000	10÷12	0,5	105
3000	1750	3000	1400	2000	10÷12	0,5	105
5000	4000	5000	2800	4000	10÷12	0,5	105
8000	6000	8000	4200	6000	10÷12	0,5	105
12000	10000	12000	5600	8000	10÷12	0,5	105
15000	-	15000	7000	10000	10÷12	0,5	105
22000	-	22000	11200	16000	10÷12	0,5	105

DIMENSIONS

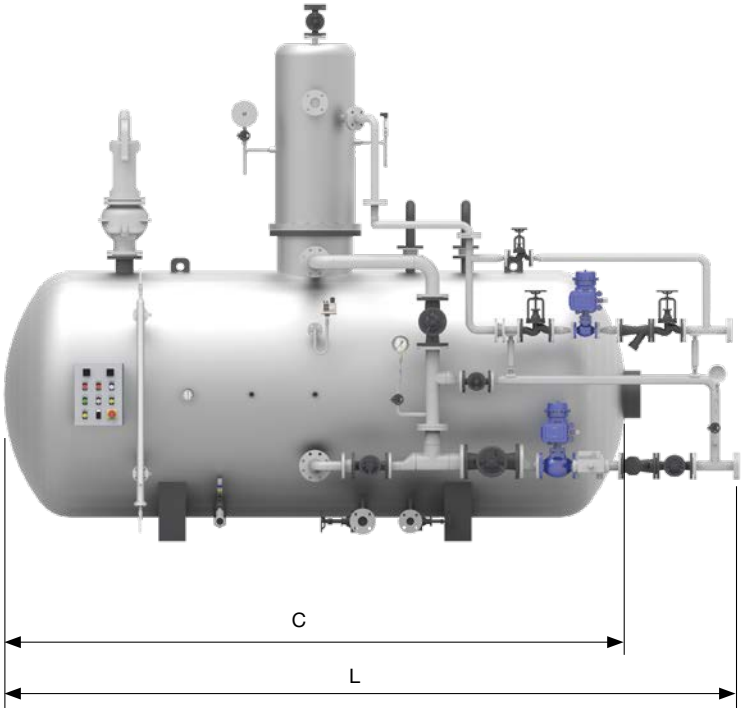

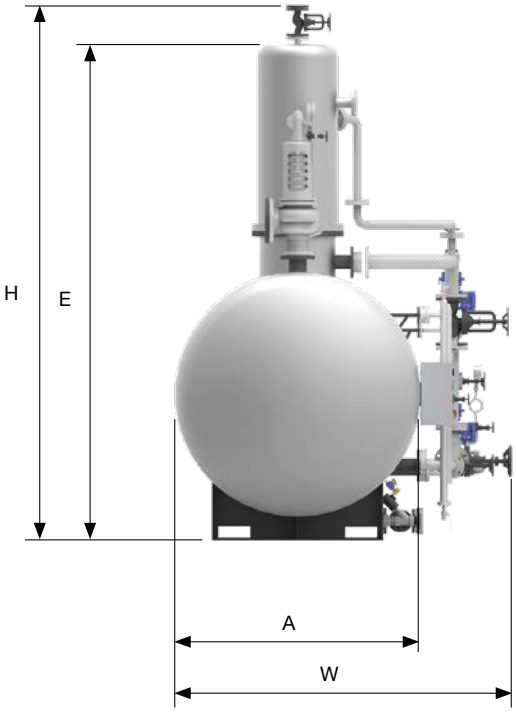

Model	W	L	H	A	C	E	Empty weight
	mm	mm	mm	mm	mm	mm	kg
1500	1550	2420	2280	950	2000	2160	890
3000	1900	2300	2730	1300	1880	2610	990
5000	2100	3030	2980	1500	2610	2860	1460
8000	1300	3270	3330	1700	2850	3210	1720
12000	2400	4545	3480	1800	4125	3360	1980
15000	2400	5045	3530	1800	4625	3410	2290
22000	2400	5980	3630	1800	5560	3510	3100

BOARD PANEL

DETE

- ON / OFF type regulation of the water level in the reservoir
- Activation of automatic discharge valve due to high water level in the reservoir
- Pressure adjustment in the reservoir with pneumatic modulating valve, to allow the steam entry in the degassing tank
- Adjustment of the water temperature in the reservoir with thermometric system and regulation valve for steam injection
- Interception of steam entry line through pneumatic valve, due to high pressure in the reservoir
- Nr.1 selector of reservoir discharge operation (Auto / 0 / Man)
- Nr.1 selector of water feeding pump operation (Auto / 0 / Man)
- Nr.1 selector of water recirculation pump operation (Auto / 0 / Man)
- Nr.1 signalling of reinstatement water entry
- Nr.1 signalling of steam entry in the deaerator
- Nr.1 signalling of discharge automatic valve activation due to high water level
- Nr.1 signalling of water loading pump operation / alarm
- Nr.1 signalling of water recirculation pump operation / alarm
- Nr.1 signalling of low water level
- Nr.1 signalling of tension ON (400 V / 3 Ph / 50 Hz) to the board panel
- Electrical protection degree IP55

DEGASSING

The deaerator has the function to reduce the concentration of the corrosive gases O_2 and CO_2 dissolved in the feeding water of the boiler. The solubility of the gases in the water reduces when the temperature increases; the problem's solution is to increase the feeding water temperature.
The following diagram shows the oxygen content dissolved in the water according to the pressure and the temperature. It can be noticed that at the boiling temperature of 105°C for an absolute working pressure of 1.2 bar we are in a zone where the O_2 content in the water is practically void.

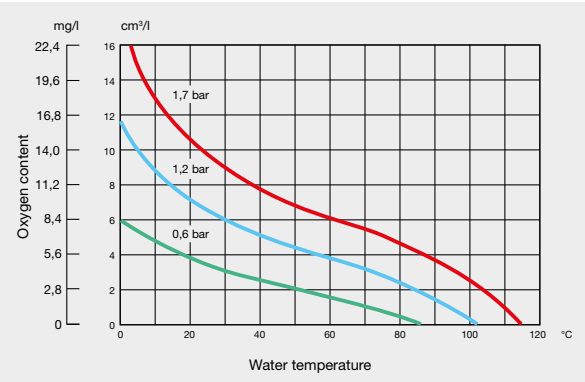

Thermophysical deaerator (Total deaeration)

In the thermo-physical de-aeration the process happens under positive pressure (0.3 – 0.4 bar).
The "hot" steam, necessary to remove the gases, is introduced through injectors positioned in the low part of the reservoir and, through a modulating valve, in the degassing tank.
The steam feeding is controlled by an electromechanical thermostat, adjusted at the temperature of 95°C, and by a pneumatic regulator acting on the modulating pneumatic valve.
The topping up of the fresh water is checked through a level regulator.
NOTE: The thermo-physical de-aeration must always be coupled with a chemical deaeration.

The deaerators of the DETE series are deaerators of the thermo-physical type for the degassing of the feeding water of the steam boilers. The appliance falls in the limits of application of the art. 3 par. 3 of the PED Directive 2014/68/UE.
The water temperature is checked and maintained through the thermometric system that checks the steam injection in the reservoir. The pressure inside the tank is checked by an adjuster that controls a pneumatic modulating valve, that allows the steam passage inside the degassing tank.
Endowed with steel basement that allows the installation at a level higher than 5 meters from the axle of the boiler feeding pumps, thus avoiding the cavitation phenomenon.
The deaerator is endowed with a water level management system, in mixing mode between the return condensates from the installation and the chemically treated reinstatement water.

The DETE deaerator is composed by the following groups:

- Steam feeding group interlocked with a thermometric system (regulation through a thermo-regulating valve for the holding of the planned temperature).
- Pressure regulating group interlocked with a pressure sensor for the control of a modulating pneumatic valve (regulation of the steam entrance in the degassing tank).
- Magnetic level indicator, with 4 bi-stable contacts, opportunely positioned for the ON-OFF control of the water level in the tank and for the alarms of low and high level.
- Pneumatic valve on the entry water line.
- Degassed water drawing group
- Steam vent
- Overflow
- Pneumatic discharge valve automatically operated
- Safety valve
- Recirculation pump
- Safety pressure switch for the operation of the pneumatic gate valve of the steam entry line
- Board panel

SERBHA

BLOW DOWN COLLECTION COOLING TANK FOR STEAM BOILERS IN CARBON STEEL					
RANGE	from 100 to 1200 liters				
WORKING PRESSURE	atmospheric				
MODELS	100	300	500	800	1200

DESCRIPTION

Blowdown vessel.

Atmospheric blowdown vessel complete with cooling water system to reduce the boiler waste fluids temperature before the drain into the waste water plant.
Made of steel, vertical tank complete with supporting, externally painted.
It has available many flanged connections for blowdown input and waste water disposal.
Designed in conformity with PED 2014/68/UE CE Directive.

Standard-production equipment:

- Automatic temperature regulation system
- Cold water inlet connection
- Overflow
- Manual drain valve
- Air vent
- Temperature gauge
- Pressure gauge

MAIN COMPONENTS

1. Cooling tank
2. Temperature adjustment system
3. Thermometer
4. Cooling water entry group
5. Discharges inlet 1 (Blow Down)
6. Discharges inlet 2 (TDS)
7. Discharges inlet 3
8. Connection for cooled water outlet (overfull)
9. Drain

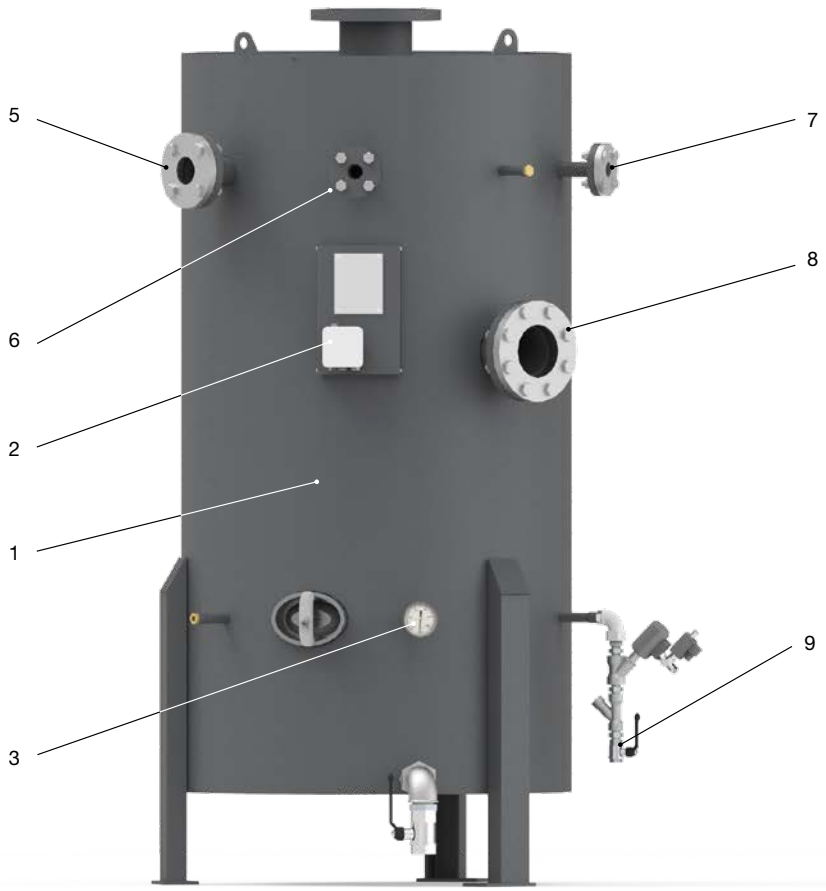

TECHNICAL DATA

Model	Water content at level	Total volume
	l	l
100	100	200
300	300	600
500	500	1000
800	800	1600
1200	1200	2400

DIMENSIONS

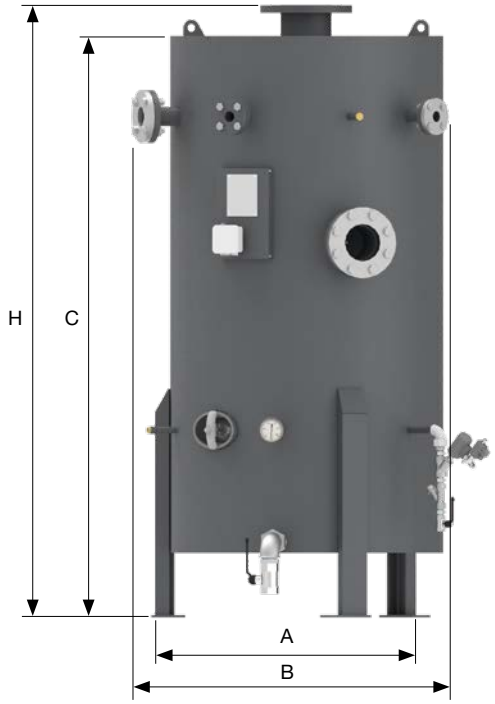

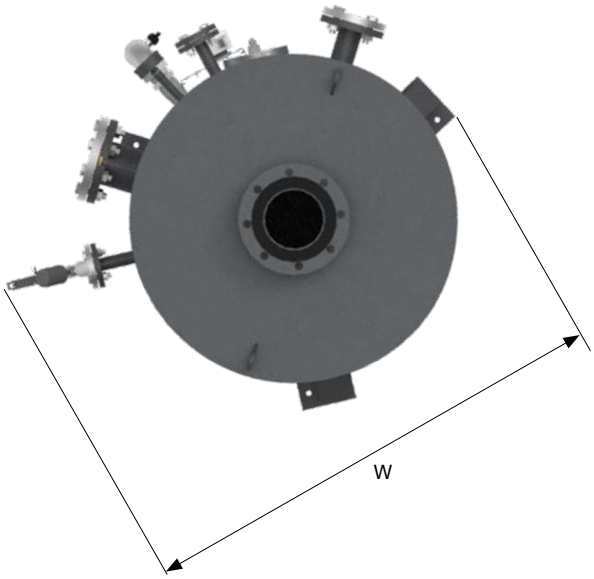

Model	W	H	A	B	C	Empty weight
	mm	mm	mm	mm	mm	kg
100	990	1105	550	750	1010	130
300	1190	1505	750	970	1410	200
500	1290	1895	850	1050	1800	280
800	1430	2245	1000	1250	2100	360
1200	1650	2475	1150	1420	2330	510

FEATURES

The reservoirs of drainage SERBHA are designed in conformity with the Directive PED 2014/68/UEE.
They are suitable for the manually or automatically controlled bottom blow down, to lodge manually controlled valves for the continuous blow down, automatically controlled valves and control systems of the TDS, reservoirs, accessories and equipments for the heat recovery.
The cooling reservoirs SERBHA are built in vertical shape, in 5 models, in carbon steel externally painted.

Operation

The operation of the blow down reservoir is simple and not special operational instructions are necessary.
The reservoir allows the sure expansion of the hot water from high to low pressure, with consequent production of re-evaporated, and the water that it contains is mixed with the cold water from net to lower its temperature before the inlet in the sewage.

The reservoir SERBHA is composed by the following groups:

Temperature regulation system, with NTC sensor

Overflow water discharge toward the sewage

Cooling water inlet group

Manual discharge with ball valve

Upper connection with ventilation system

Control thermometer and manometer

DÎATHER’

THREE PASS THERMAL OIL HEATER								
OUTPUT RANGE	from 116 to 5815 kW							
THERMOCARRIER FLUID	thermal oil							
WORKING TEMPERATURE	300°C							
MODELS	120	230	350	465	580	700	930	1160
	1500	1900	2300	2900	3500	4650	5800	-

DESCRIPTION

Three pass thermal oil heater.
Horizontal design, vertical on request.

DIATHER’ is a thermarl oil heater, three pass.
It can be operated with liquid or gaseous fuels.

Design features:

- **Coil:** two concentric coils with bottom screen, inserted in the outer shell, hermetically sealed to the smokes, formed by drawn up pipes of seamless steel tubes type, wound in spiral, in quality steel of suitable thickness.
- **Bottom:** of the boiler body boiler, bolted, insulated and endowed with cleaning door and smoke chamber connection to the chimney.
- **Front door:** is built in welded steel plate, of wide dimensions to facilitate the operations of maintenance, hinged, insulated with refractory material and endowed with flame sight glass and burner plate.
- **Furnace:** with passing flame, accessible from the front door.
- **The base:** is built with a steel frame.
- **Insulation:** the shell is thermally insulated with a double layer of rock wool cladding, suitably supported and covered externally of aluminum.

Standard equipment: (1)

- 2 flanged connections (flow and return) on right-hand side. Left-hand or vertical on request.
- Group of gaskets, bolts and counter flanges for flanged connections.
- 1 differential pressure switch.
- 2 manometers on flow and return manifolds.
- Drain valve.
- Lifting lugs.
- Control board panel IP55 400V - 3+N - 50Hz
- Document folder enclosing:
  - Manufacturer's Declaration of Conformity.
  - Installation, operation and service manuals.
  - Certificates of safety components.
  - Control board’s electric schemes and related Declaration of Conformity.

Optional equipment:

- Outer casing in stainless steel
- Single circulation oil pump unit
- Double circulation oil pump unit
- IML_OIL Board panel
- V_ATMO Atmosferic expansion tank
- V_PRESS Pressurized expansion tank
- V_OIL Thermal oil collection vessel
- Plant oil loading pump
- DG_OIL Dearator
- Combustion air preheater

(1) The quantity and the model may vary according to the configuration.

MAIN COMPONENTS

1. Boiler body
2. Front door
3. Board panel
4. Differential pressure switch
5. Manometers on flow and return manifolds

T1. Flow connection
T2. Return connection
T3. Drain
T4. Chimney connection

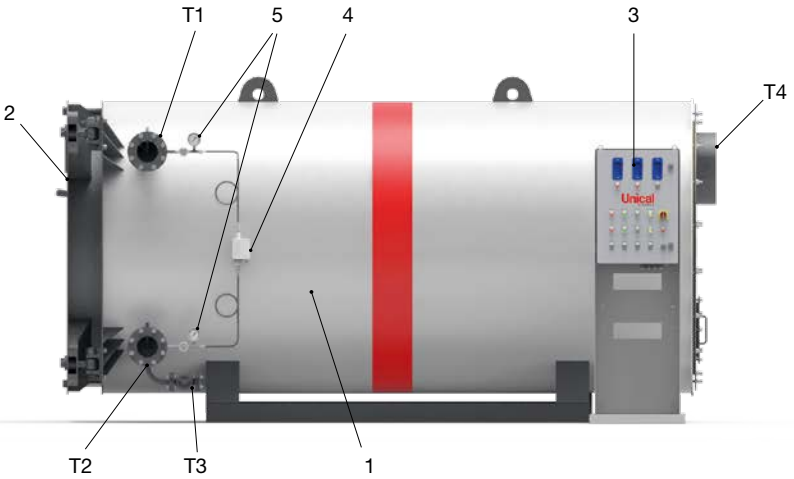

PRODUCT PLUS VALUES

COIL
two concentric coils with bottom screen, inserted in the outer shell, hermetically sealed to the smokes, formed by drawn up pipes of “seamless steel tubes” type, wound in spiral, in quality steel of suitable thickness

BOTTOM
of the boiler body boiler, bolted, insulated and endowed with cleaning door and smoke chamber connection to the chimney

FURNACE
with passing flame, accessible from the front door

FRONT DOOR
of wide dimensions to facilitate the operations of maintenance, hinged, insulated with refractory material and endowed with flame sight glass and burner plate

EXTERNAL INSULATION
made of a double layer of high-density rock wool

EXTERNAL CASING
in aluminium

TECHNICAL DATA

Model	Nominal output	Nominal input	ΔP smoke side	Oil pump flow rate	Delta T	Head pressure	Pump power	Oil side ΔP	Burner head max. dia.	Burner head min. length	Empty weight
	kW	kW	mbar	m³/h	K	m.c.l.	kW	m.c.l.	mm	mm	kg
120	116.3	134.3	1.5	6.0	40	45	3	26	220	240	700
230	232.6	267.6	2.0	10.6	40	49	5.5	23	220	240	950
350	348.8	401.0	2.5	15.9	40	48	5.5	25	220	240	1250
465	465.1	534.1	3.0	22.0	40	45	5.5	19	240	240	1600
580	581.4	668.5	3.2	26.5	40	45	7.5	20	240	250	1700
700	697.7	802.1	3.1	31.8	40	45	7.5	23	240	250	1800
930	930.2	1069.3	3.5	42.0	40	40	7.5	17	270	250	2300
1160	1162.8	1336.8	3.8	50.0	40	46	11.0	25	300	260	2800
1500	1511.6	1737.6	4.0	69.0	40	42	11.0	20	360	260	3800
1900	1860.5	2138.4	4.2	81.0	40	50	15	27	360	260	4200
2300	2325.6	2672.5	4.5	101.0	40	49	15	24	360	270	6000
2900	2906.9	3342.0	4.5	126.0	40	60	30	37	430	270	8500
3500	3488.4	4009.2	5.0	159.0	40	56	30	32	430	270	9000
4650	4651.2	5346.0	6.0	202.0	40	58	37	35	430	280	13000
5800	5813.9	6682.7	7.0	252.0	40	58	45	41	430	280	15000

DIMENSIONS

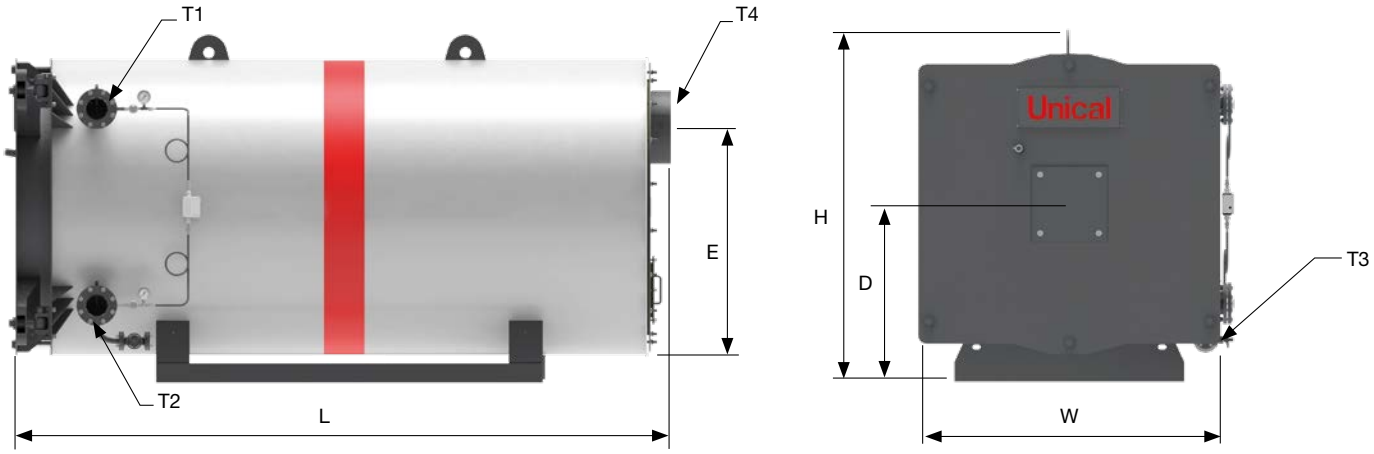

Model	W	L	H	D	E	T1/T2	T3	T4
	mm	mm	mm	mm	mm	DN	DN	Øi mm
120	930	1570	1170	620	800	32	20	194
230	1060	1810	1300	680	900	40	20	244
350	1060	2120	1300	680	900	50	20	244
465	1240	2250	1490	780	1060	65	20	294
580	1240	2380	1490	780	1060	65	20	294
700	1260	2380	1500	780	1060	65	20	294
930	1370	3000	1610	840	1160	80	20	344
1160	1540	3270	1780	920	1320	100	25	344
1500	1670	3550	1920	1000	1440	100	25	394
1900	1670	3700	1920	1000	1440	125	25	394
2300	1840	4100	2100	1080	1580	125	25	444
2900	2200	4400	2450	1260	1900	150	25	494
3500	2200	4620	2450	1260	1900	150	25	494
4650	2390	5920	2650	1360	2060	200	25	594
5800	2690	6490	2990	1530	2360	200	25	694

STANDARD DELIVERED EQUIPMENTS

- Three smoke pass diathermic oil boiler
- Outer aluminium casing
- Insulating mattress for burner blast tube
- Group of gaskets, bolts and counter flanges for flanged connections
- Differential pressure switch
- n. 2 manometers in glycerine bath, on flow and return manifolds
- Drain valve

OPTIONAL EQUIPMENTS

- Outer casing in stainless stee

- IML_OIL Board panel

- DG_OIL Dearator

- V_ATMO Open expansion vessel
- V_PRESS Pressurised expansion vessel

- V_OIL Oil collection vessel

- Single circulation pump unit

  Volute casing pumps for horizontal installation, back pull-out design, single-stage, ratings and dimensions to EN 733, radially split volute casing, volute casing with integrally cast pump feet, replaceable casing wear rings, closed radial impeller with multiply curved vanes, single mechanical seal to EN 12756, double mechanical seal to EN 12756, drive-end bearings: rolling element bearings, pump-end bearings: plain bearings.

- Dual oil circulation pump available, with valves and connection pipes to the heater

- System oil loading pump

- Combustion air preheater

  with smooth pipes, designed to increase the heater efficiency by 4/5%

CT EXT

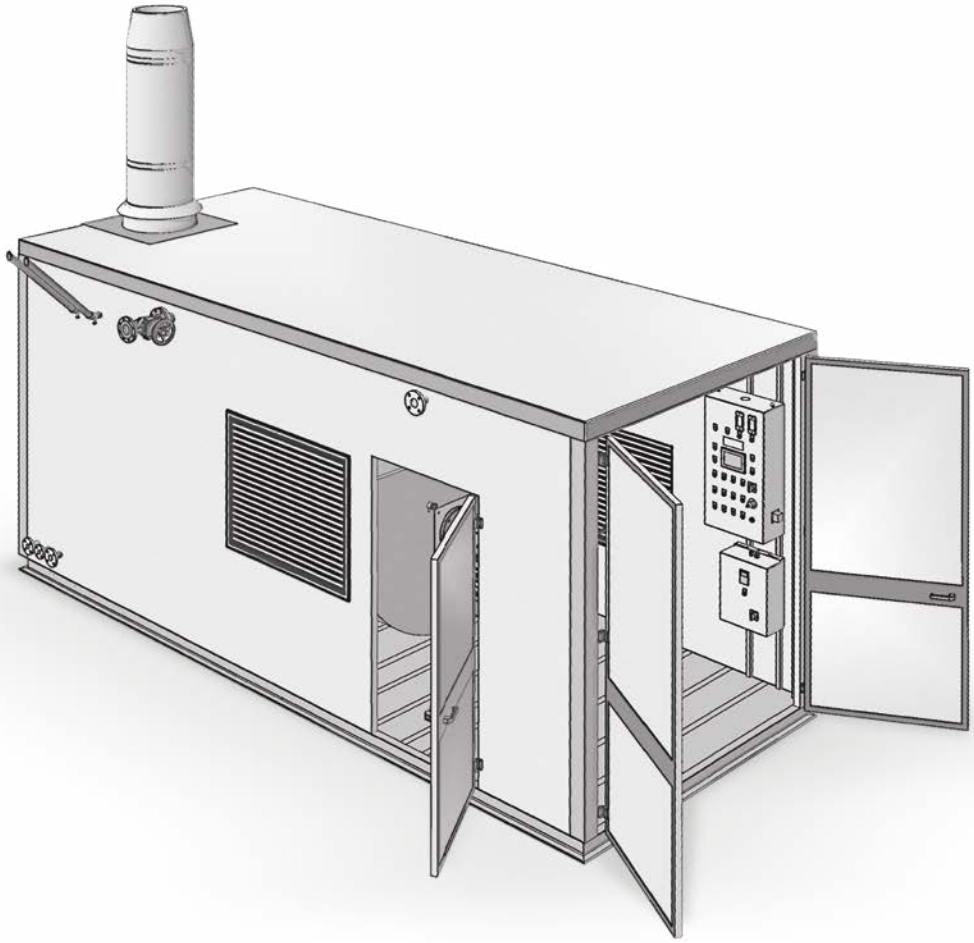

MOBILE OUTDOOR BOILER ROOM

Unical outdoor boiler room with casing, an excellent solution that can always be placed in the most suitable place, next to the plant, building or on the roof.
The proposed solution is designed and built according to the customer's actual needs.

Possible set-up with a wide range of industrial boilers and accessories by Unical.

The boiler room is complete with all components required for operation, ready for use and embedded in a pre-assembled structure, with class 0 insulating sandwich panels, complete with pedestrian doors and double lead doors for easy access and maintenance.

All boiler rooms made by Unical comply with the Fire Brigade directive, with liquid and gaseous fuels.

SYSTEM CONFIGURATIONS (EXAMPLES)

SYSTEM 1

Boiler room for superheated water

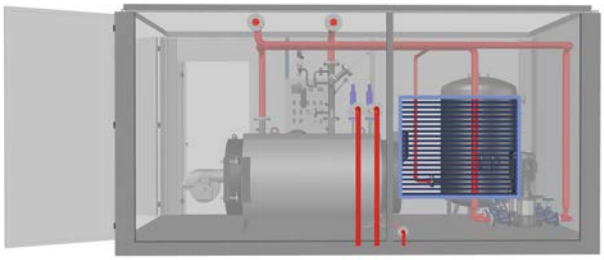

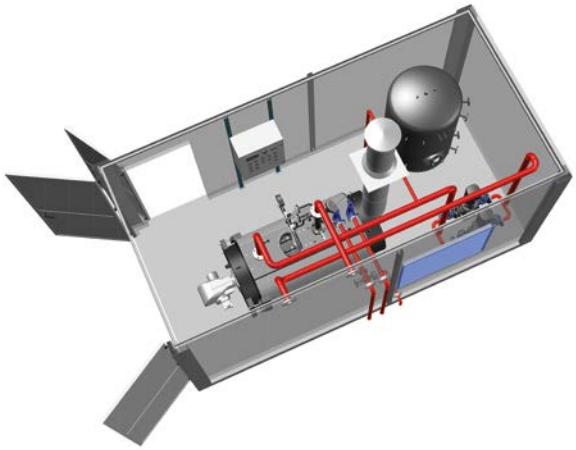

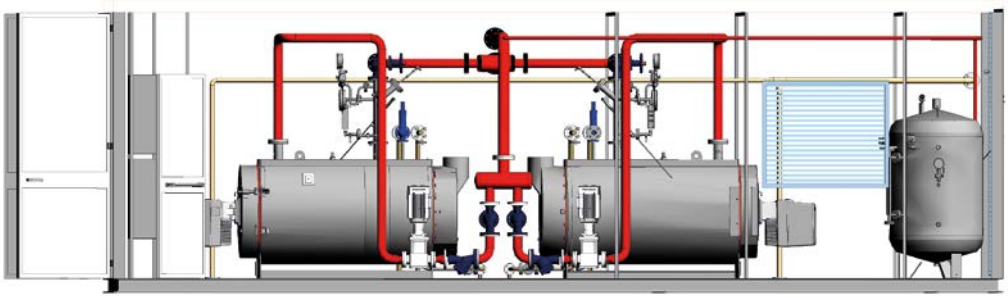

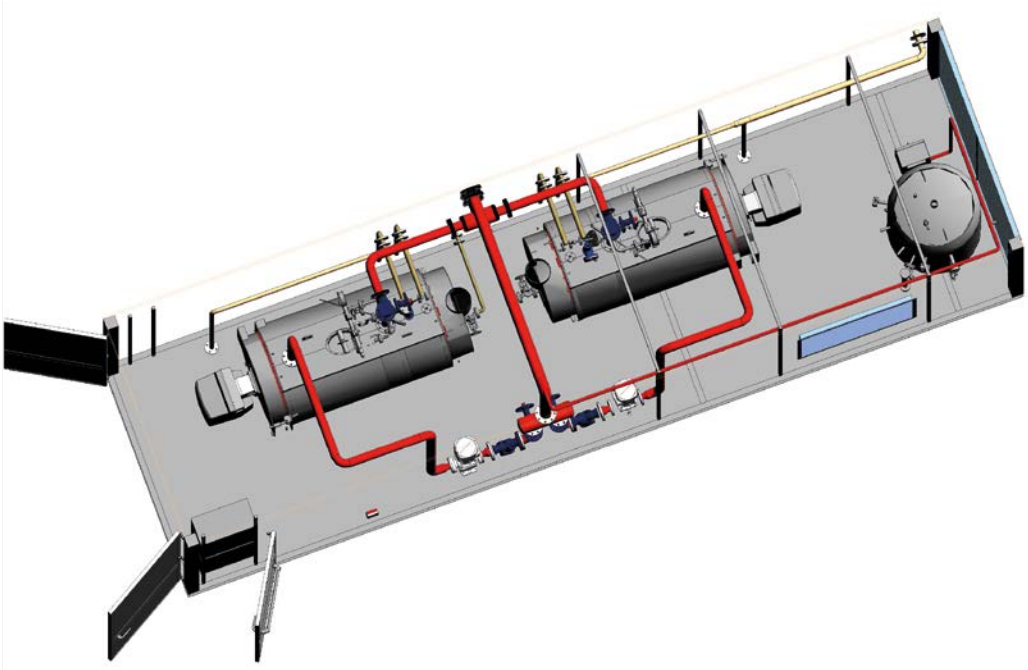

SYSTEM CONFIGURATIONS (EXAMPLES)

SYSTEM 2

Boiler room for steam

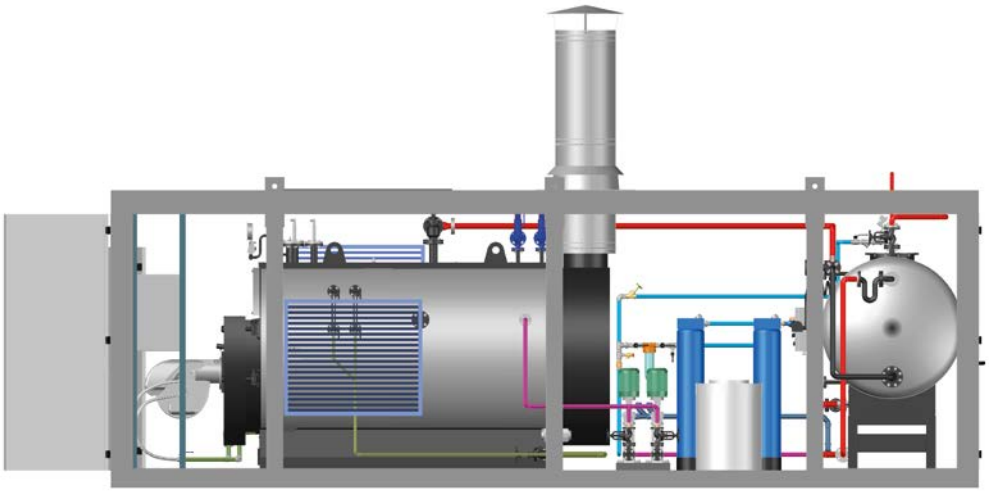

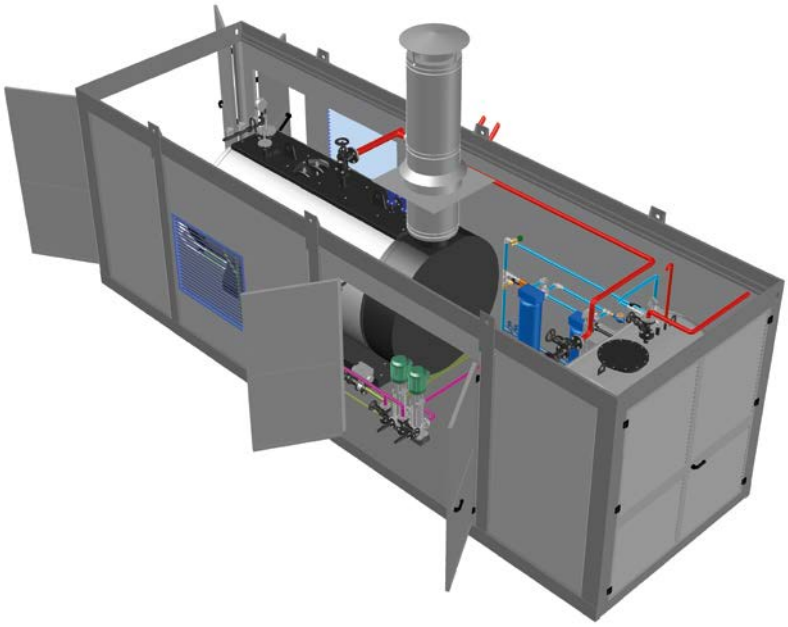

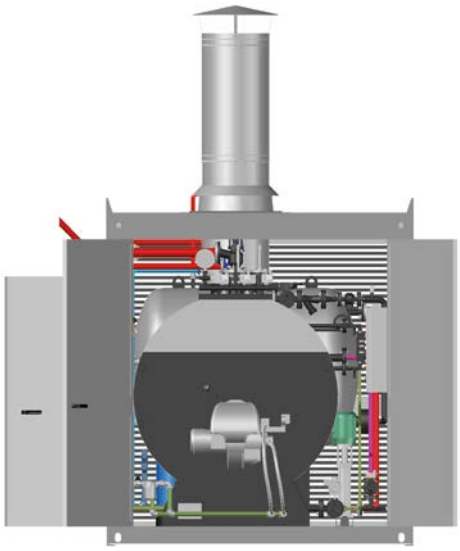

REFINERY BOILER ROOM

- NO.18 DIATHERMIC OIL HEATERS MOD. DIATHER' 4650 COMPLETE WITH COMBUSTION AIR PRE-HEATERS

TEXTILE COMPANY BOILER ROOM

- STEAM BOILER TRYPASS' 7000 COMPLETE WITH ECONOMIZER AND LOW NOx NATURAL GAS BURNER
- 95,5% EFFICIENCY
- NOx EMISSIONS < 70 mg/Nm^3

RAILWAY STATION BOILER ROOM

- n. 2 STEAM BOILER TRYPASS' 15000 COMPLETE WITH ECONOMIZER AND LOW NOx NATURAL GAS BURNER
- RENDIMENTO 95,5%
- NOx EMISSIONS < 70 mg/Nm^3

BREWERY BOILER ROOM

- STEAM GENERATOR MOD. TRYPASS 15000 COMPLETE WITH ECONOMISER AND LOW NOx EMISSION METHANE GAS BURNER
- 96,3% EFFICIENCY
- NOx EMISSIONS < 80 mg/Nm^3

FOOD COMPANY BOILER ROOM

- STEAM BOILER TRYPASS' 8000 COMPLETE WITH ECONOMIZER AND LOW NOx NATURAL GAS BURNER
- 96% EFFICIENCY
- NOx EMISSIONS < 70 mg/Nm^3

TEXTILE COMPANY BOILER ROOM

- STEAM BOILER TRYPASS 6000 COMPLETE WITH ECONOMIZER AND LOW NOx NATURAL GAS BURNER
- 96% EFFICIENCY
- NOx EMISSIONS < 80 mg/Nm^3

BREWERY BOILER ROOM BALADIN - PIOZZO (CN)

- STEAM BOILER BAHR'12 2000 HPEC COMPLETE WITH NATURAL GAS BURNER
- 96,5% EFFICIENCY
- NOx EMISSIONS < 120 mg/Nm^3

BOILER ROOM OF A COMPANY MANUFACTURING CLEANSING PRODUCTS

- OVERHEATED WATER BOILERS SUHR'5 1000 & 1400 HP COMPLETE WITH NATURAL GAS BURNERS
- 96% EFFICIENCY
- NOx EMISSIONS < 120 mg/Nm^3

BOILER ROOM OF THE TEXTILE INDUSTRY CORNELIANI – MANTOVA

- STEAM BOILER BAHR'12 3G 2000 HPEC COMPLETE WITH LOW-NOx NATURAL GAS BURNER
- 96,5% EFFICIENCY
- NOx EMISSIONS < 80 mg/Nm^3

DISTRICT HEATING BOILER ROOM

- THREE PASS HOT WATER BOILER TERNOX 5000 2S LOW NOX HP, COMPLETE WITH LOW NOx NATURAL GAS BURNER
- 95,5% EFFICIENCY
- NOx EMISSIONS < 80 mg/Nm³

FOOD COMPANY BOILER ROOM

- STEAM BOILER TRYPASS 8000, COMPLETE WITH ECONOMIZER AND LOW NOx NATURAL GAS BURNER
- 96% EFFICIENCY
- NOx EMISSIONS < 70 mg/Nm³

TEXTILE INDUSTRY BOILER ROOM

- n. 2 HOT WATER BOILERS TERNOX 5000 2S LOW NOx
- 98,2% EFFICIENCY
- NOx EMISSIONS < 80 mg/Nm³

The Made in Italy is the focus of Unical.

4 the plants displaced on the national territory, between production and logistics, strategically connected and to the state-of-the-art for automation and robotizing of the constructive phases.

In the factory of Caorso wall hung and floor standing boilers are manufactured, both, in traditional and condensing version (up to 900 kW); in the one of Carbonara Po biomass and steel boilers for pressure jet burners (up to 7,000 kW). The industrial line, that includes steam generators up to 16,607 kW (25,000 kg/h), is mostly dedicated on the special high-performance boilers in virtue of particular heat exchange patented pipes.

AMI
ABSOLUTELY MADE IN ITALY

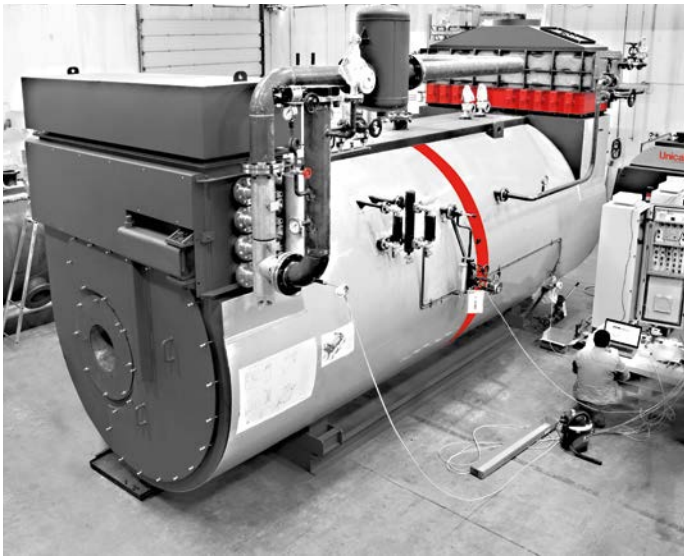

The Unical Steamer department is the innovative feature of Unical's power.
The design of each boiler allows Unical to build special appliances, meeting any customer need.

A range aimed at large Industrial businesses, a complete catalogue of boilers manufactured in Italy by highly skilled personnel, with unique technological details, some covered by Unical Patent, like the special smoke pipes which significantly increase the boiler efficiency and control panels developed to ensure operator-free control, in total safety, up to 72 hours and with possible remote control.

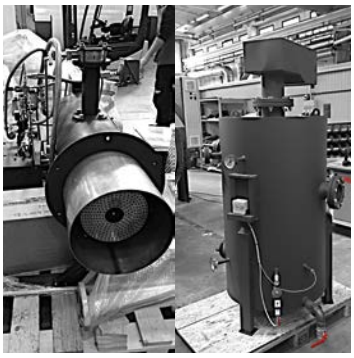

The Unical Industrial catalogue offers several products for the various segments:

STEAM
Steam is fundamental and irreplaceable in many industrial sectors such as: the pharmaceutical, food, petrochemical, chemical, paper industry, canning for storage purposes, production of rubber, plastic, etc., for which it represents the so-called raw material.

It is equally essential in the civil sector for sterilisation: hospitals, canteens, laundries, etc. It is also extensively used in large ground heating installations and on ships for the production of energy through turbines, pumps and alternators. Wherever there is the need to produce and manage pressure thermal energy, steam is the ideal solution.

SUPERHEATED WATER
Systems with this technology are particularly suitable for the following sectors: District heating, pasta factory machinery, large hospitals with different exchange stations where it is essential to maintain high temperatures inside the entire system.

DIATHERMIC OIL
In cases where high operating temperatures are required, diathermic oil systems are recommended compared to steam or superheated water systems, allowing the system to work with temperatures up to 350°C.

Other important features of the diathermic oil systems are guaranteeing they can constantly maintain the required temperatures, as well as safety (non-flammable and low explosion-risk fluid).
This is why diathermic oil is widely used, for example, in the petrochemical field.

At Unical, we see certifications as more than just a piece of paper needed to comply with legislation. We often obtain certification well ahead of our competitors to demonstrate our serious commitment to continuous improvement in quality and safety in all areas of our company, as well as our compliance with all applicable laws and standards.

Just like our products, our company too is a model of correctness and professionalism, with production and management procedures to guarantee our customers the highest level of service from all areas of manufacturing and sales.

Unical is an industry leader in procedures for health and safety in the workplace, especially considering the delicate nature of our products. Protection of the environment is another important issue. We are committed to improving the working and extended environments, reducing waste, recycling packaging, eliminating unnecessary paperwork and doing everything we can to improve the quality of life. Unical has always undertaken constant research into reducing emissions and improving efficiency.

We are rightly proud of our leadership in this area, and are committed to maximising quality on all markets, though many of our competitors are less interested in the conformity of their products to foreign legislation, and consider this too difficult or complicated.

To prove the point, on the 19 January 1993, Unical was the first manufacturer to obtain CE marking for the whole of Europe, just as great is the satisfaction, after having worked with determination and commitment, to have obtained, first in Europe, the CTDP authorization from UL, valid for the American and Canadian market.

CE

Unical **was the first company in Europe authorised to use the CE mark** for boilers (January 1993)

UNI EN ISO 9001:2015	Quality Management System
UNI EN ISO 14001:2015	Environment Management System
UNI EN ISO 45001:2018	Management system of health and safety at workplace
Organization, management and control model	Legislative Decree 231/2001
ASME Stamp H	Prestigious certification for UNITED STATES and CANADA
EAC	Russia - Belarus - Kazakhstan
GASKEUR SV-HR 107	Holland
HR TOP	Belgium
SELO	China

CERTIgaz

AUTORISATION DE LABORATOIRE
LABORATORY AUTHORIZATION

LAB CE GAZ 009

Renouvellement 1

UNICAL AG SpA
Via Padana Inferiore, 52/C
I – 29012 CAORSO (PC)
ITALIE

Son laboratoire est autorisé par CERTIGAZ à effectuer les essais, listés en annexe (5 pages), pour les produits couverts par les Règles de marquage CE en vigueur (disponibles auprès de CERTIGAZ ou sur Internet www.certigaz.fr) selon les Spécifications SLAB100 -autorisation de laboratoire de fabricant- basés sur la norme NF EN ISO/CEI 17025.

His laboratory is authorized by CERTIGAZ for testing of products according to the CE Marking Rules (available at CERTIGAZ or on the website www.certigaz.fr) and to the SLAB100 Specifications -autorisation de laboratoire de fabricant- based on the NF EN ISO/CEI 17025 standard

Cette autorisation est valable jusqu'au 19 octobre 2021
This authorization is valid until October 19th, 2021

Fait à Neuilly sur Seine, le 04 octobre 2017

Vincent DELARUE
Directeur Général

CE 1312

Toute reproduction de cette autorisation doit l'être dans son intégralité. Reproduction of this authorization must be in full. Page 1/8

CERTIGAZ SAS - 8, rue de l'Hôtel de Ville - F 92200 Neuilly-sur-Seine - Tél. : +33 (0)1 80 21 07 40 - Fax : +33 (0)1 80 21 07 93
info@certigaz.fr - www.certigaz.fr

Quality system of the testing laboratory
according to the Standard ISO / IEC 17025: 2018

ACCREDIA

Bureau Veritas Italia SpA is a Notified Body under the number 1370

PRD N° 0098

CERTIFICATO DI APPROVAZIONE DEL SISTEMA DI QUALITA
CERTIFICATE OF QUALITY SYSTEM APPROVAL
N° CE-1370-PED-D-UNC 001-18-ITA-rev-A

Bureau Veritas Italia SpA, agendo nell'ambito della sua notifica (numero dell'organismo notificato 1370) attesta che il sistema di qualità applicato dal fabbricante per la produzione, per l'ispezione finale e per le prove sull'attrezzatura a pressione identificata di seguito è stato esaminato secondo le prescrizioni del modulo D dell'allegato III della direttiva « Attrezzature a Pressione » n. 2014/68/UE ed è conforme alle disposizioni della Direttiva.

Bureau Veritas Italia SpA, acting within the scope of its notification (notified body number 1370), attests that the quality system operated by the manufacturer for production, final product inspection and testing of the pressure equipment identified hereunder has been examined against the provisions of annex III, module D, of the Pressure Equipment directive n° 2014/68/EU, and found to satisfy the provisions of the directive which apply to it.

Fabbricante (Nome) / Manufacturer (Name):	UNICAL AG S.p.A
Indirizzo / Address:	Via Ronceda, 81 46020, CARBONARA DI PO', Italy
Nome - Marchio commerciale: / Trading Name - Mark	UNICAL AG S.p.A
Descrizione dell'attrezzatura / Equipment description:	Pressure Equipment

Vedasi altri dati sul retro di questa pagina / View other data on the back of this page.

Questo certificato scadrà il (gg/mm/aaaa): 24/07/2021
This certificate will expire on (dd/mm/yyyy)

L'approvazione è subordinata agli audit di sorveglianza, visite, prove e verifiche condotte da Bureau Veritas Italia SpA che ha stipulato un contratto con il fabbricante, in base alle disposizioni di tale contratto
The approval is conditional upon the surveillance audits, visits, tests and verifications to be carried out by the local Bureau Veritas entity that entered into a contract with the manufacturer, pursuant to the provisions of such contract.

Data della verifica (gg/mm/aaaa) / Date of initial or renewal audit (dd/mm/yyyy): 25/07/2018
Ispettore / Auditor: ALESSANDRO DEMARCO

Fatto a / Made at	Il (gg/mm/aaaa) / On (dd/mm/yyyy)	Approvato e Registrato in / Approved and Recorded in	Firmato da / Signed by	Firma autorizzata dell'Organismo Notificato N 1370 / Signature Authorized by Notified Body 1370
PADOVA	22/01/2019	Italy	CLAUDIO CUSIMANO	

Codice di Registrazione / Registration Code: 2019/000190/CE-1370-PED

Il presente documento è soggetto ai termini delle Condizioni Generali di Vendita allegate al contratto firmato dal richiedente / The present document is subject to the terms of General Conditions of Service attached to the agreement signed by the applicant

Il presente documento non può essere riprodotto, se non dal fabbricante nel rispetto delle disposizioni del contratto stipulato con Bureau Veritas Italia SpA.
The present document shall not be reproduced, except by the manufacturer in compliance with the provisions of the contract entered into between the local Bureau Veritas entity and the manufacturer.

© Bureau Veritas Italia SpA
Viale Monza 347, 20126 Milano

File n°: 18.IT.3205031.138

Chr :P5005/19/CC/cc

www.bureauveritas.it

Page 1 of 3

Quality system for the production of pressure equipment
MODULE D (PED)

UL LLC
DATA ACCEPTANCE PROGRAM
CERTIFICATE OF QUALIFICATION

UNICAL AG SPA

Via Padana Inferiore 52/C Caorso, Pc, 29012 Italy

CLIENT TEST DATA PROGRAM

File DA2804

CTDP 2017-2018

CTDP 2018-2019

UL CTDP authorization
for the Caorso Laboratory

中华人民共和国
特种设备制造许可证
Manufacture License of Special Equipment
People's Republic of China
（锅炉）(Boiler)

No.: TS2100D66-2022

公司/Company: 意大利优尼卡股份有限公司
Unical AG S.p.A
单位地址/Register Address:
Castelsitario (MN),Via Roma 123,cap:46033,-Mantova,Italy
制造地址/Manufacture Address 1:
Carbonara Po: Via Ronceda,81-46020 Carbonara PO-Mantova,Italy
制造地址/Manufacture Address 2:
Caorso: 29012 Caorso (PC),Via Padana Inferiore,52/C-Piacenza,Italy
经审查，获准从事下列锅炉的制造：
Has been audited and approved to manufacture the Boilers within the scope as:

锅炉 B/ Boilers B
地址 1：蒸汽锅炉、热水锅炉
Manufacture Address 1:Steam Boilers and Hot Water Boilers
地址 2：高铸铝热水锅炉组装
Manufacture Address 2:Cast Aluminum Hot Water Boiler Assembly Only

审批机关：
Approval/Issue Organ:
General Administration of Quality Supervision, Inspection and Quarantine of the People's Republic of China

发证机关：
Issue Organ

有效期至：2022 年 01 月 08 日
Date of Expiration: Jan 8, 2022

发证日期：2019 年 01 月 22 日
Date of Issue: Jan 22,2019

SELO
Certification for the construction of boilers and pressure vessels according with the "Chinese Manufacturing System"

«АКВА-ТЕРМ ПРОФИ»
VIII ежегодная премия

Диплом
лауреата 2011 г.

в номинации
«За продвижение новых технологий»

Unical

Организатор
АКВАТЕРМ

При поддержке
aqua-therm
ITE
Reed Exhibitions

AWARD RUSSIA
Acknowledgment to Unical for the introduction of the breakthrough technology in Russia

Unical

Head office - Alternative energies division

46033 Casteldario (MN)
via Roma, 123
ph. +39 0376 57001
fax +39 0376 660556

Domestic boiler division

29012 Caorso (PC)
via Padana Inferiore, 52/C
ph. +39 0523 822541
fax +39 0523 822258

Industrial boiler division

46020 Carbonara Po (MN)
via Roncada, 81
ph. +39 0386 807011
fax +39 0386 41781

Spare parts distribution

29012 Zerbio di Caorso (PC)
via Ponchielli, 8/A
ph. +39 0523 814083
fax +39 0523 816750

export@unical-ag.com
www.unical.eu

Ed.1 - 03/2019 - cod. 00338413

Unical

www.unical.eu