Unical®

HPOWER ONE R

70R – 90R – 120R – 140R – 160RT – 180R

70RK – 90RK – 120RK – 140RK – 160RTK – 180RK

USER'S AND INSTALLER'S MANUAL

CONTENTS

1 PURPOSE AND CONTENTS OF THE MANUAL 4

1.1 HOW TO KEEP THE MANUAL 4
1.2 GRAPHIC SYMBOLS USED IN THE MANUAL 4

2 NORMATIVE REFERENCES 4

3 PERMITTED USE 5

4 GENERAL SAFETY GUIDELINES 5

4.1 WORKERS' HEALTH AND SAFETY 5
4.2 PERSONAL PROTECTIVE EQUIPMENT 6
4.3 SAFETY SIGNS 6
4.4 REFRIGERANT SAFETY DATA SHEET 7
4.5 SPECIFIC R32 GAS WARNINGS 8
4.6 R32 GAS CHARGE 8
4.7 R32 GAS DISPOSAL 8
4.8 SAFETY RULES FOR R32 GAS TRANSPORT AND STORAGE 8

5 AVERAGE VERSIONS 9

6 INSTALLATION 9

6.1 GENERAL 9
6.2 LIFTING AND HANDLING 10
6.3 POSITIONING AND MINIMUM TECHNICAL CLEARANCES 10
6.4 PLUMBING CONNECTIONS 11
6.4.1 Features of the circuit water 12
6.4.2 Condensation discharge system 12
6.4.3 Filling the system 13
6.4.4 Discharge of the plant 13
6.4.5 Service sleeves 13
6.4.6 Air venting valve 14
6.4.7 HYDRAULIC CIRCUIT 15
6.5 REFRIGERANT DIAGRAM HP_OWER ONE 70R – 70RK - 90R – 90RK 16
6.6 REFRIGERANT DIAGRAM HP_OWER ONE 120R – 120RK 17
6.7 REFRIGERANT DIAGRAM HP_OWER ONE 140R - 140RK - 160RT – 160RTK - 180R - 180RK 17
6.8 ELECTRICAL CONNECTIONS 18
6.8.1 Access to the electric panel 18
6.8.2 Power supply 19
6.8.3 Connection terminal block 19

7 STARTUP 21

7.1 SWITCHING ON THE UNIT 22

8 INSTRUCTIONS FOR THE USER 22

9 SHUTDOWNS FOR LONG PERIODS 22

10 MAINTENANCE AND PERIODIC CHECKS 23

10.1 CLEANING THE FINNED COIL 24
10.1.1 Cleaning the finned coils treated with the anti-corrosion method 24
10.2 EXTRAORDINARY MAINTENANCE 24
10.3 ENVIRONMENTAL PROTECTION 24

11 DECOMMISSIONING 24

11.1 RESIDUAL RISKS 26

12 TECHNICAL DATA 32

12.1 TECHNICAL SHEET 32
12.2 UNIT AND AUXILIARY ELECTRICAL DATA 34
12.3 CORRECTIVE FACTORS 34

13 PRODUCT FICHE EU REGULATION 811/2013 36

14 HYDRAULIC CIRCUIT AVAILABLE HEAD PRESSURE 50

15 OPERATING LIMITS 52

15.1 EVAPORATOR WATER FLOW RATE 52

15.2 COLD WATER PRODUCTION (SUMMER MODE) 53
15.3 HOT WATER PRODUCTION (WINTER MODE) 53
15.4 AMBIENT AIR TEMPERATURE AND SUMMARISED TABLE 53

16 CORRECTION FACTORS FOR USE OF GLYCOL 55

17 DIMENSIONS 56

17.1.1 Model HP_OWER ONE 70R - 70RK - 90R - 90RK 56
17.1.2 Model HP_OWER ONE 120R - 120RK 57
17.1.3 Model HP_OWER ONE 140R - 140RK - 160RT - 160RTK - 180R - 180RK 57
17.2 ACCES 57
17.3 SING THE INNER PARTS 58
17.3.1 Mod. HP_OWER ONE 70R - 70RK - 90R - 90RK 58
17.3.2 Mod. HP_OWER ONE 120R - 120RK 58
17.3.3 Mod. HP_OWER ONE 140R - 140RK - 160RT - 160RTK - 180R - 180RK 59

18 REGISTER OF OPERATIONS OF MAINTENANCE 60

The manual of HP_OWER ONE units contains all the necessary information for optimal use of the equipment under safe conditions for the operator.

1 PURPOSE AND CONTENTS OF THE MANUAL

This manual provides basic information as to the selection, installation, operation and maintenance of heat pumps. It is intended for the operators of the appliance and it enables them to use the equipment efficiently, even if they do not have any previous specific knowledge.

	CAUTION: Although this manual has been drafted for the end user, some of the operations described are the responsibility of skilled personnel having technical or professional qualifications to perform the activities herein. They must also be kept up-to-date by attending refresher courses acknowledged by the competent authorities. These tasks include: installation, routine and extraordinary maintenance, decommissioning of the appliance and any other operation indicated "by qualified personnel".
	When the installation and/or maintenance operations are over, the qualified operator must correctly inform the end user regarding use of the appliance and the necessary periodical inspections.
	The operator has the responsibility of submitting all of the documentation necessary (including this manual) and of explaining that it all must be kept with care, in the vicinity of the appliance and always available.

The manual describes the machine at the moment it was sold. It must therefore be considered adequate with respect to the state-of-the-art in terms of potentiality, ergonomics, safety and functionality.
The company also performs technological upgrades and does not consider itself obliged to update the manuals of previous machine versions which could even be incompatible. Therefore make sure to use the supplied manual for the installed unit.
The user is recommended to follow the instructions contained in this booklet, especially those concerning safety and routine maintenance.

1.1 HOW TO KEEP THE MANUAL

The manual has to always be kept together with the unit it refers to. It has to be stored in a safe place, away from dust and moisture. It must be accessible to all users who shall consult it any time they are in doubt on how to operate the equipment.
The company reserves the right to modify its products and related manuals without necessarily updating previous versions of the reference material. We also decline any responsibility for possible inaccuracies in the manual if due to printing or transcription errors.
The customer shall store any updated copy of the manual or parts of it delivered by the manufacturer as an attachment to this manual.
The company is available to give any detailed information about this manual and to give information regarding the use and the maintenance of its own units.

1.2 GRAPHIC SYMBOLS USED IN THE MANUAL

	Indicates operations that can be dangerous for people and/or disrupt the correct operation of the unit
	Indicates prohibited operations.
	Indicates important information that the operator has to follow in order to guarantee the correct operation of the unit in complete safety.

2 NORMATIVE REFERENCES

HP_OWER ONE units have been designed in compliance with the following directives and harmonized standards on the safety of machinery:

- EC directives, 2014/35/UE, 2014/30/UE, 2011/65/UE, 2012/19/UE, 2014/68/UE
- Standard UNI EN 12735-1
- Standards IEC EN 60335-1, IEC EN 60335-2-40
- Standards IEC EN 55014-1, IEC EN 55014-2
- EN 50581
- EN 14276

And the following directives, regulations and standards on ecodesign and energy labelling:

- Community directive 2009/125/EU and subsequent transposal
- Community directive 2010/30/EU and subsequent transposal
- EU Regulation n.811/2013
- EU Regulation n.813/2013
- EN 14511-1:2018. EN 14511-2:2018. EN 14511-3:2018. EN 14511-4:2018
- EN 14825:2018

3 PERMITTED USE

- The company excludes any contractual and extra contractual liability for damage caused to persons, animals or objects, by incorrect installation, setting and maintenance, improper use of the equipment, and the partial or superficial reading of the information contained in this manual.
- These units are built for the heating and/or cooling of water. Any other use not expressly authorised by the manufacturer is considered improper and therefore not allowed. The fluid to be used is exclusively water or a mixture of water and glycol in case of low water temperatures
- The installation place and the water and electric circuit must be established by the plant designer and must take into account both technical requirements as well as any applicable local laws and specific authorisations.
- All the work must be executed by skilled and qualified personnel, competent on the existing regulations in country of installation.
- This appliance is intended to be used by expert or trained operators in shops, light industry and in factories, or for commercial use by non-expert personnel.
- The appliance may be used by children at least 8 years old and by persons with reduced physical, sensory or mental capabilities or without experience or the necessary knowledge as long as they are supervised or after they themselves have received instructions on the safe use of the appliance and understand the relevant dangers. Children must not play with the appliance. The cleaning and maintenance which the user is expected to carry out on the unit cannot be done by children without supervision.
- The use of the device by people with electrically controlled medical devices, such as pacemakers, is prohibited, as harmful interference can be created.

4 GENERAL SAFETY GUIDELINES

Before starting any type of operation on the HP_OWER ONE units, every operator must be perfectly familiar with the operation of the machine and its controls and must have read and understood all the information in this manual.

	It is strictly forbidden to remove and/or to tamper with any safety device.
	Children or unassisted disabled persons are not allowed to use the appliance.
	Do not touch the appliance when barefoot or parts of the body are wet or damp.
	It is forbidden to perform any cleaning operation when the master switch is 'ON'.
	It is forbidden to pull, detach or twist the appliance's electric cables, even if unplugged.
	Do not step on, sit down on and/or place any type of object on the appliance.
	Do not spray or pour water directly on the unit.
	Do not dispose of, abandon or leave within reach of children packaging materials (cardboard, staples, plastic bags, etc.) as they may represent a hazard.
	Any routine or extraordinary maintenance operation must be carried out with the machine stopped and disconnected.
	Do not place your hands or introduce screwdrivers, spanners or any other tools on moving parts.
	The machine operator and maintenance personnel must receive suitable training for the performance of their tasks in safety.
	Operators must know how to use personal protective equipment and the accident-prevention rules of national and international laws and regulations.

4.1 WORKERS' HEALTH AND SAFETY

The European Union has issued some directives regarding the safety and health of workers, including: 89/391/EEC, 89/686/EEC, 2009/104/EC, 86/188/EEC and 77/576/EEC and subsequent amendments which every employer is obliged to follow and have followed. We observe therefore that:

	Do not tamper with or replace parts of the unit without the specific consent of the manufacturer. The manufacturer shall have no responsibility whatsoever in case of unauthorised operations.
	Using components, consumables or spare parts that do not correspond to those recommended by the manufacturer and/or listed in this manual may be dangerous for the operators and/or damage the unit.
	The operator's workplace has to be kept clean, tidy and clear of objects that may hinder free movement. Appropriate lighting of the work place shall be provided so as to allow the operator to carry out the required operations safely. Poor or excessive lighting can cause risks.
	Ensure that work places are always adequately ventilated and that the extraction systems are working, in good condition and in compliance with the requirements of the laws in force.

The unit works with R32 refrigerant, which is included in the list of greenhouse gases (GWP 675) which are subject to the requirements in EU regulation n. 517/2014 called "F-GAS" (mandatory in the European zone). Among the provisions of this regulation, it sets forth that operators working on systems running with greenhouse gases be in possession of a certification, issued or acknowledged by the competent authorities, attesting that they have passed a test authorising them to perform this work. In particular

- Up to 3kg total refrigerant in the appliance: category 2 certification.
- 3kg and more total refrigerant in the appliance: category 1 certification.

The gaseous form of R32 refrigerant is heavier than air and if released into the environment, most of it tends to concentrate in poorly ventilated areas. Inhaling it can cause dizziness and sensations of suffocation (see the refrigerant's safety data sheet in paragraph 4.4.

Pay attention to the fact that refrigerant fluids can be odourless

For any operation on the heat pump system:

	***Wear the appropriate PPE (specifically gloves and goggles).***
	Make sure that the workplace is well ventilated. Do not work in closed environments or ditches with little air circulation.
	Do not operate on the refrigerant in the vicinity of hot parts or naked flames.
	Do not release the refrigerant into the environment and pay special attention to accidental leakage from pipes and/or fittings even after having emptied the plant.

4.2 PERSONAL PROTECTIVE EQUIPMENT

When operating and servicing the HP_OWER ONE units, the following personal protective equipment must be used:

		***Clothing: Maintenance technicians and operators must wear protective clothing that complies with the basic safety requirements currently in force. In case of slippery floors, they must also wear safety shoes with non-slip soles.***
		***Gloves: During maintenance or cleaning operations, appropriate protective gloves must be used.***
		***Mask and goggles: Respiratory protection (mask) and eye protection (goggles) should be used during cleaning operations.***

4.3 SAFETY SIGNS

The unit features the following safety signs, which must be complied with:

	***Generic hazard***
	***Dangerous electric voltage***
	***Moving parts***
	***Surfaces which can cause injuries***
	***Boiling surfaces which can cause burns***
	***Fire hazard***

4.4 REFRIGERANT SAFETY DATA SHEET

Name:	R32.
	HAZARDS IDENTIFICATION
Main hazards:	Asphyxiation.
Specific hazards:	Quick evaporation could cause it to freeze.
	FIRST AID MEASURES
General information:	Do not administer to people who are unconscious.
Inhalation:	Immediately remove to fresh air. Use oxygen or artificial respiration as required. The use of adrenaline or similar drugs should be avoided.
Eye contact:	Carefully rinse with plenty of water for at least 15 minutes and get medical attention.
Skin contact:	Wash immediately with plenty of water for at least 15 minutes. Apply a sterile gauze. Immediately remove contaminated clothing.
	FIRE FIGHTING MEASURES
Extinguishing media:	Water spray, dry powder.
Specific hazards:	Breakage or explosion of vessel.
Specific methods:	Cool down the containers with a water spray from a safe position. Stop the product leakage if possible. Use water spray, if possible, to abate the fumes. Move the vessels away from the area of the fire if this can be done without posing any risks.
	ACCIDENTAL RELEASE MEASURES
Personal precautions:	Try to stop the leak. Evacuate personnel to safety areas. Eliminate the ignition sources. Ventilate appropriately. Use personal protective equipment.
Environmental precautions:	Try to stop the leak.
Cleaning methods:	Ventilate the area.
	HANDLING AND STORAGE
Handling: technical measures/precautions:	Allow efficient air exchange and/or suction the work environments.
advice for safe use:	Do not breath in fumes or aerosol.
Storage:	Close carefully and store in a cool, dry and well ventilated area. Keep in original containers. Incompatible products: explosive, flammable materials, organic peroxide
	EXPOSURE CONTROLS/PERSONAL PROTECTION
Control parameters:	OEL – data not available. DNEL: Derived no effect level (workers) long-term – systemic effects, inhalation = 7035 mg/m^3. PNEC: Predicted no-effect concentration water (fresh water) = 0.142 mg/l aquatic, intermittent releases = 1.42 mg/l sediment, fresh water = 0.534 mg/kg dry weight
Respiratory protection:	Not required.
Eye protection:	Safety goggles.
Hand protection:	Latex gloves.
Hygienic measures:	No smoking.
	PHYSICAL AND CHEMICAL PROPERTIES
Colour:	Colourless.
Odour:	Ethereal. Hard to perceive at low concentrations.
Boiling point:	-51.7°C at atm. press.
Flash point:	648 °C.
Relative gas density (air =1) Relative liquid density (water =1)	1.8. 1.1.
Solubility in water:	280000 mg/l.

STABILITY AND REACTIVITY	
Stability:	Stable under normal conditions.
Materials to avoid:	Air, oxidizing agents, humidity.
Decomposition products hazardous:	Under normal storage and use conditions, hazardous decomposition products should not be generated.
TOXICOLOGICAL INFORMATION	
Acute toxicity:	LD/LC50/inhalation/4 hours/on rat >1107000 mg/m^3.
Local effects:	No known effect.
Long-term toxicity:	No known effect.
ENVIRONMENTAL INFORMATION	
Global warming potential GWP (R744=1):	675
Ozone Depletion Potential ODP (R11=1):	0
Disposal considerations:	Refer to the supplier's gas retrieval program. Avoid direct release into the atmosphere.

4.5 SPECIFIC R32 GAS WARNINGS

The R32 refrigerant gas:
- is odourless;
- is flammable, but only if there are naked flames;
- it may cause an explosion, but only if a given concentration in air is reached.

It is good practice to adhere to the following indictions:
- do not smoke near the unit;
- affix a no smoking sign near the unit;
- keep the premises where the unit is installed properly aerated;
- do not pierce or burn the unit;
- do not place the unit near ignition sources, such as naked flames, electric heaters etc.;
- every extraordinary maintenance or repair on the unit must be performed by skilled technicians or qualified personnel;
- a gas leak test must be performed after installation.

4.6 R32 GAS CHARGE

The procedures described below may only be performed by skilled technicians or qualified personnel:
- ensure the R32 is not contaminated by any other types of refrigerant;
- keep the gas cylinder in an upright position when charging;
- apply the appropriate label on the unit after charging;
- do not charge more refrigerant gas than needed;
- when charging is completed, perform leak tests before the operating test;
- once all the above operations have been completed, a second leak test should be performed.

4.7 R32 GAS DISPOSAL

The procedures described below may only be performed by skilled technicians or qualified personnel:
- do not dispose of the gas in areas at risk of explosive mixtures forming with air The gas should be disposed of in an appropriate torch with backfiring stop device. Contact the supplier should you require operating instructions.

4.8 SAFETY RULES FOR R32 GAS TRANSPORT AND STORAGE

Before opening the unit's packaging, ensure there are no gas leaks in the environment with an appropriate gas detector. Ensure there are no fire ignition sources near the unit.
No smoking is allowed near the unit.
Transport and storage must be performed in accordance with the national regulations in force. Specifically, according to ADR provisions, the total maximum quantity by transport unit in terms of net mass for flammable gases is 333 kg.

5 AVERAGE VERSIONS

Model	Description
HP_OWER ONE 70R	Size 7kW
HP_OWER ONE 70RK	Size 7kW + Antifreeze kit
HP_OWER ONE 90R	Size 9kW
HP_OWER ONE 90RK	Size 9kW + Antifreeze kit
HP_OWER ONE 120R	Size 12kW
HP_OWER ONE 120RK	Size 12kW + Antifreeze kit
HP_OWER ONE 140R	Size 14kW
HP_OWER ONE 140RK	Size 14kW + Antifreeze kit
HP_OWER ONE 160RT	Size 16kW
HP_OWER ONE 160RTK	Size 16kW + Antifreeze kit
HP_OWER ONE 180R	Size 18kW
HP_OWER ONE 180RK	Size 18kW + Antifreeze kit

The -K version is equipped with a preassembled antifreeze kit for heat exchangers:

- ✓ Low absorption heating cables on the base of the air / refrigerant exchanger with automatic management and pre-wired electrical connection
- ✓ Electric heaters in antifreeze PET applied to the plates of the water / refrigerant exchanger

6 INSTALLATION

	CAUTION: All the operation described below must be done by QUALIFIED PERSONNEL ONLY. Before any operation on the unit, make sure that power is disconnected. Also make sure that power cannot be accidentally switched back on until all the operations are over, by means of specific locks.

6.1 GENERAL

When installing or intervening on the chiller unit, it is necessary to strictly follow the rules listed in this manual, to observe all the indications on the unit and however to take all possible precautions. Failure to comply with the rules reported on this manual can create dangerous situations.

	After receiving the unit, immediately check its integrity. The unit left the factory in perfect condition; any damage must be immediately reported to the carrier and recorded on the Delivery Note before signing it.

The company must be informed, within 8 days, of the extent of the damage. The Customer should prepare a written statement of any severe damage.

	CAUTION: The units are designed for outdoor installation. The outside temperature must never exceed 46°C. Beyond this value, the unit is no longer covered by the current regulations in the field of safety of pressure equipment.
	CAUTION: The installation place must be without any fire risks. Therefore all the necessary measures should be adopted in order to prevent the risk of fire at the installation place. The appliance must not be placed near naked flames and ignition sources
	CAUTION: The unit must be installed so as to allow free movement for repair and maintenance operations. The warranty does not cover costs for platforms or other lifting equipment needed for any interventions.
	All the maintenance operations and tests must be done by QUALIFIED PERSONNEL ONLY.
	Before any operation on the unit, make sure that power is disconnected.
	Do not use equipment to speed up the defrost process or for cleaning except for those recommended by the manufacturer
	The appliance must be placed in a room without ignition sources constantly running (for example naked flames, a running gas-fired appliance or a running electric heater)
	Do not perforate or burn
	CAUTION: There are some moving components inside the unit. Pay the utmost attention when operating in their vicinity, even if power is disconnected.

	The heads and delivery pipe of the compressor are normally quite hot.
	Be careful when working near the condensing coils. ***The aluminium fins are very sharp and can cause serious injuries.***
	After the maintenance operations, close the panels by fixing them with screws.

6.2 LIFTING AND HANDLING

During unloading and positioning of the unit, utmost care must be taken to avoid abrupt or violent manoeuvres in order to protect the internal electronic components. The units can be lifted by means of a forklift or, in alternative, with belts, being sure not to damage the side panels and the cover. It is important to keep the unit horizontal during these operations.

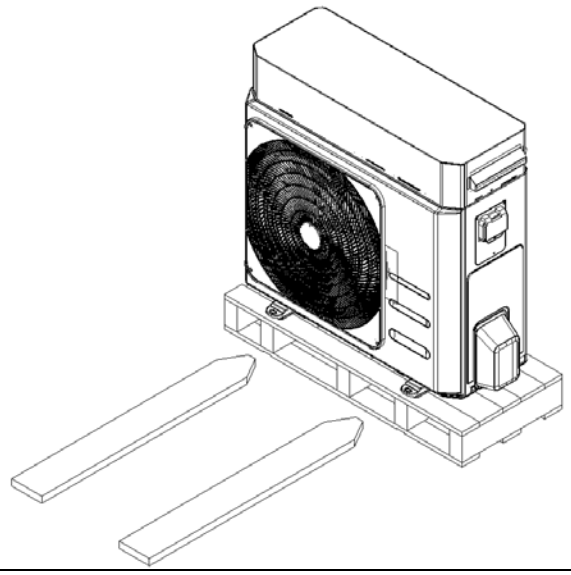

6.3 POSITIONING AND MINIMUM TECHNICAL CLEARANCES

All models of the HP_OWER ONE range are designed and constructed for outdoor installations.
It is advisable to create an adequately sized support base for the unit. The units transmit a small amount of vibrations to the ground: it is nonetheless advisable to apply vibration dampers between the base frame and support surface. It is very important to avoid recirculation between intake and delivery air, so as not to downgrade performance of the unit or even to interrupt its normal operation.

	At least 5 m from the appliance there must be no shafts or manholes where gases might build up and generate an explosive atmosphere.

This is why the Minimum clearances shown below must be strictly guaranteed.

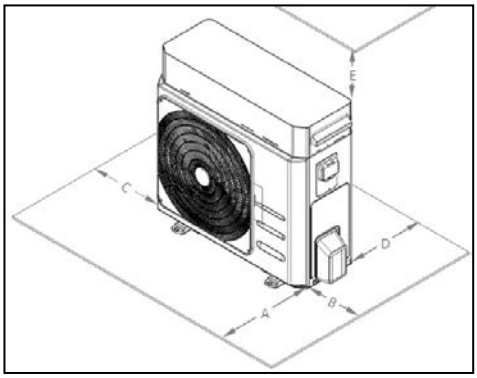

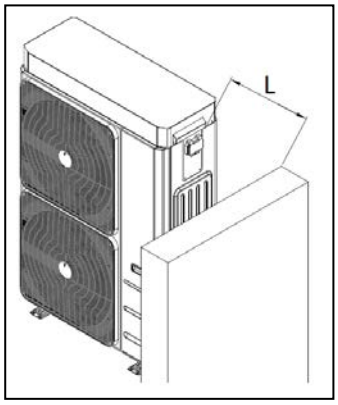

MODEL	A[mm]	B [mm]	C [mm]	D [mm]	E[mm]	L[mm]
HP_OWER ONE 70R/RK	1500	500	400	400	500	500
HP_OWER ONE 90R/RK	1500	500	400	400	500	500
HP_OWER ONE 120R/RK	1500	500	400	400	500	500
HP_OWER ONE 140R/RK	1500	500	400	400	500	500
HP_OWER ONE 160RT/RTK	1500	500	400	400	500	500
HP_OWER ONE 180R/RK	1500	500	400	400	500	500

	Do not obstruct or cover the vents on the top cover.

In the event of side-by-side units, the minimum Lmin distance between them is 1 m.

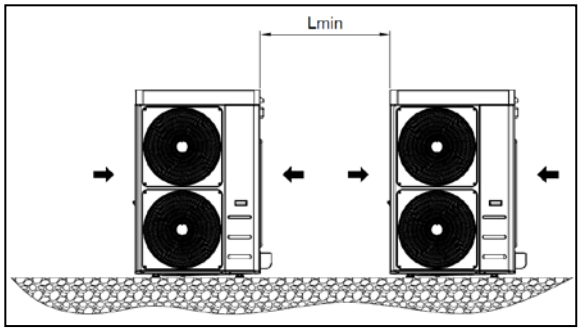

Covering with canopies or placing near plants or walls should be avoided to prevent air recirculation.

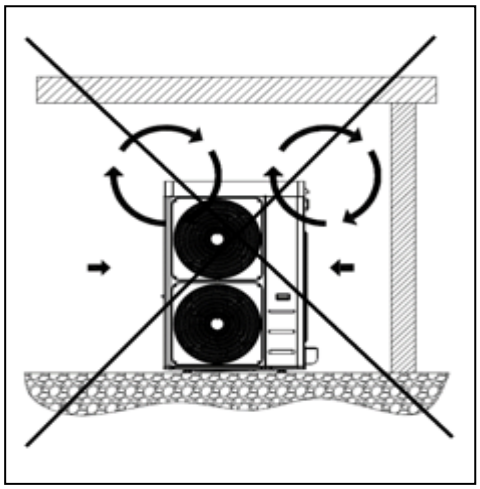

In the event of winds stronger than 2.2 m/s the use of wind barriers is recommended.

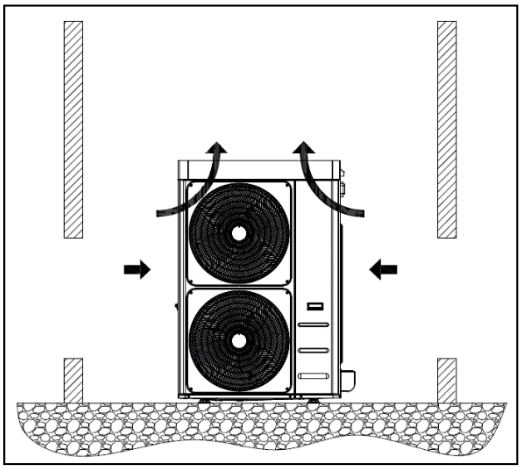

6.4 PLUMBING CONNECTIONS

The plumbing connections must be made in accordance with national and/or local regulations; pipes can be made of steel, galvanised steel or PVC. Pipes must be accurately sized according to the nominal water flow rate of the unit and the pressure drops of the water circuit. All pipes must be insulated with closed-cell material of adequate thickness. The chiller must be connected to the pipes using new flexible joints, not reused ones. The water circuit should include the following components:

- Well thermometers to monitor the circuit's temperature.
- Manual gate valves to isolate the chiller from the water circuit.
- Metal Y filter and dirt separator (installed on the return pipe) with metal mesh no larger than 1 mm.
- Loading group and exhaust valve where necessary.
- expansion vessel correctly sized

	CAUTION: when sizing the pipes, make sure not to exceed the maximum pressure drop on plant side reported in the technical data table in Paragraph 0 (see useful head).
	CAUTION: connect the pipes to their fittings always using the key to key method.
	CAUTION: The return pipe from the system must be installed near the label "WATER INLET" otherwise the evaporator could freeze.
	CAUTION: It is mandatory to install a metal filter (with mesh no larger than 1 mm) and a dirt separator on the return pipe from the system labelled "WATER INLET". If the flow switch is manipulated or altered, or if the metal filter and dirt separator are missing, the warranty will terminate immediately. The filter and dirt separator must be kept clean. Therefore after installing the unit, you must make sure that they are still clean and check them regularly.
	All of the units leave the company supplied with flow switch (installed in factory). If the flow switch is altered or removed or if the water filter and dirt separator are missing from the unit, the guarantee will be void. Refer to the wiring diagram attached to the unit to connect the flow switch.
	The heating system and the safety valves must comply with the requirements of standard EN 12828.

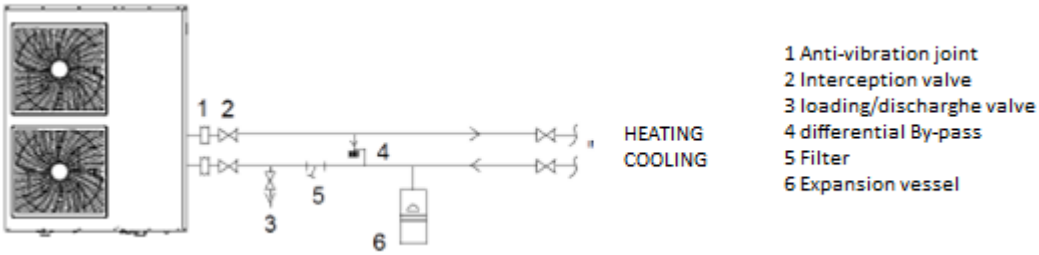

6.4.1 Features of the circuit water

To guarantee correct operation of the unit, the water must be appropriately filtered (see the instructions at the start of this paragraph) and there must be only a minimum amount of dissolved substances. The maximum allowed values are shown below

MAXIMUM CHEMICAL-PHYSICAL PROPERTIES ALLOWED FOR THE CIRCUIT WATER	
PH	7.5 - 9
Electrical conductivity	100 - 500 µS/cm
Total hardness	4.5 – 8.5 dH
Temperature	< 65°C
Oxygen content	< 0.1 ppm
Max glycol quantity	40 %
Phosphates (PO_4)	< 2ppm
Manganese (Mn)	< 0.05 ppm
Iron (Fe)	< 0.3 ppm
Alkalinity (HCO_3)	70 – 300 ppm
Chloride ions (Cl-)	< 50 ppm
Sulphate ions (SO_4)	< 50 ppm
Sulphide ions (S)	None
Ammonium ions (NH_4)	None
Silica (SiO_2)	< 30 ppm

6.4.2 Condensation discharge system

All HP_OWER ONE units are built in such a way that the base of the unit acts as a condensate drip tray. A plastic fitting is standard supplied to be connected below the base in the specific slot in order to connect a pipe which channels the condensate.

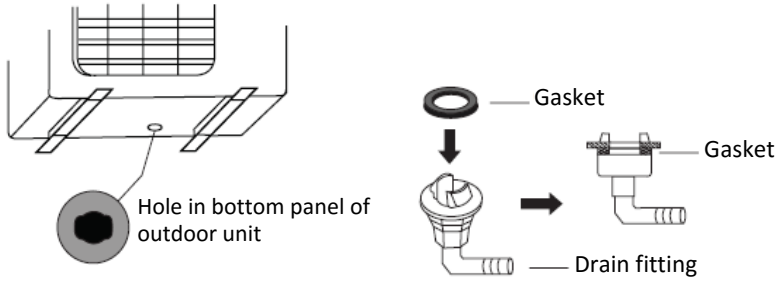

Each unit is therefore fitted with a hole on the base of the hydronic kit (on the coil side) to drain condensation which could drip from the pipes of the plumbing system. Since these pipes are well insulated, a minimum amount of condensation is produced anyway and therefore it is not mandatory to connect a drain pipe to this fitting.

6.4.3 Filling the system

	CAUTION: supervise all filling/top-up operations.
	CAUTION: before filling/topping up the system, disconnect power to the units.
	CAUTION: the system must always be filled/topped up in controlled pressure conditions (max 1 bar). Make sure that a pressure reducer and safety valve have been installed on the filling/top-up line.
	CAUTION: the water on the filling/top-up line must be appropriately pre-filtered from any impurities and suspended particles. Make sure that a removable cartridge filter and dirt separator are installed on the line.
	CAUTION: regularly check and vent the air built up in the system.
	CAUTION: install an automatic air venting valve at the highest point of the system.

6.4.4 Discharge of the plant

If the unit needs to be drained completely, first close the manual inlet and outlet gate valves (not included in supply) and then detach the pipes on the outside of the water inlet and outlet to drain liquid from the unit (to make this operation easier, it is recommended to install two drain valves between the unit and manual gate valves on the outside of the water inlet and outlet).

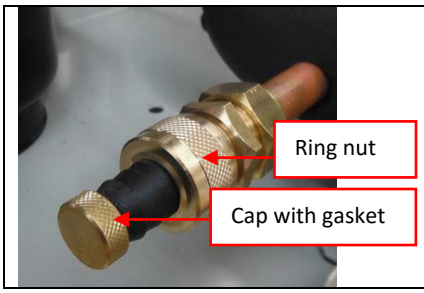	When it is required to top up the circuit or to adapt the glycol level, please use the service valve. Unscrew and remove the cap from the service valve and connect a 14 or 12 mm pipe (inside diameter - check the valve model installed on your unit), connected to the water mains, to the hose connector and then drain the circuit by unscrewing the specific ring nut. After the end of the operation, retighten the ring nut and screw the cap back on. In any case it is recommended to use an external valve to fill the system which can be set up by the installer.

6.4.5 Service sleeves

2 service sleeves with cap (1/4”G) are installed in the unit’s water circuit, downstream and upstream of the circulator (ref. SM unit functional diagram paragraph 5.6.2); when disassembling/fitting on the cap use 2 spanners as pictured to prevent damaging the pipes.

6.4.6 Air venting valve

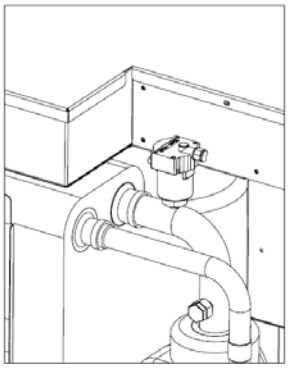

The unit is fitted with an air venting valve to automatically remove air that has built up in the circuit, preventing undesirable effects such as premature corrosion and wear, lower performance and low exchange output.
The device also features a safety function because, in the event of exchanger breakdown, it allows the refrigerant gas to escape outside, preventing it fro being conveyed to the internal terminals.
The valve can be kept in a closed position by closing the plug on the drain; by loosening the plug, the valve remains in
open position and air is vented automatically.

	In the event of observing a water leak, it is mandatory to replace the component, by loosening it with a wrench, as pictured below.

6.4.7 HYDRAULIC CIRCUIT

HP_OWER ONE 70R - 70RK - 90R - 90RK

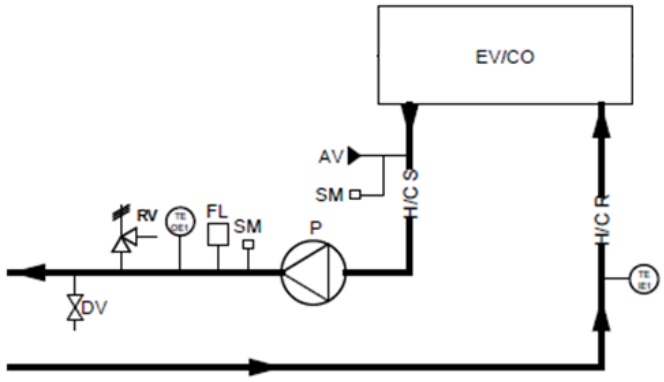

HP_OWER ONE 120R - 120RK

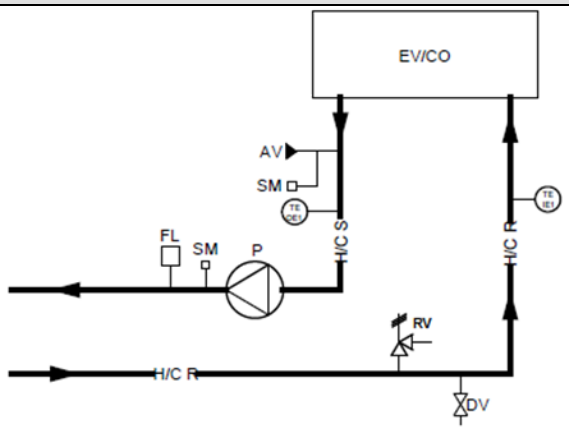

HP_OWER ONE 140R - 140RK - 160RT - 160RTK - 180R - 180RK

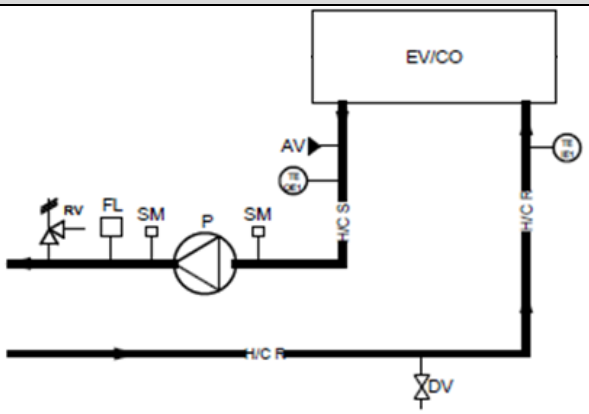

KEY

TE IE	UTILITY INLET TEMPERATURE PROBE
TEOE	UTILITY OUTLET TEMPERATURE PROBE
DV	DRAIN VALVE
RV	SAFETY VALVE
FL	FLOW SWITCH
P	PUMP
AV	AUTOMATIC AIR VENTING VALVE
SM	SERVICE SLEEVE

PROTECTION AND CONTROL CALIBRATIONS

Desciption	Value
High pressure switch	42,8 bar
High pressure alarm	41,5 bar
Low pressure alarm	It depends on the unit
Maximum number of restarts after high / low pressure alarm (manual reset)	3
Defrost protection	Alarm output: 4 °C Alarm return: +7°C
hydronic circuit safety valve	6 bar

6.5 REFRIGERANT DIAGRAM HP_OWER ONE 70R – 70RK - 90R – 90RK

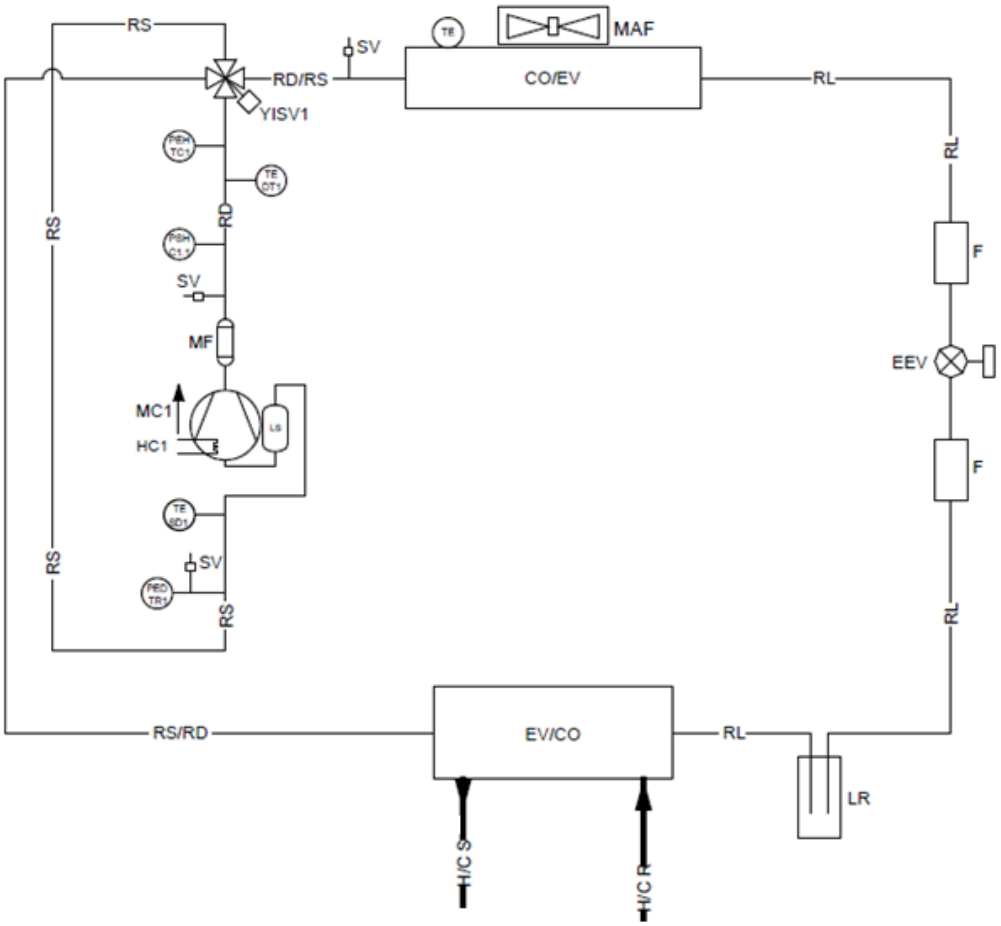

CODE	DESCRIPTION	CODE	DESCRIPTION
MC	COMPRESSOR	H/CS	UTILITY WATER OUTLET
CO/EV	CONDENSER (IN CHILLER MODE)	H/CR	UTILITY WATER INLET
EV/CO	EVAPORATOR (IN CHILLER MODE)	PEHTC	HIGH PRESSURE TRANSDUCER
EEV	ELECTRONIC EXPANSION VALVE	PEDTR	LOW PRESSURE TRANSDUCER
YISV	4-WAY CYCLE REVERSING VALVE	TE	OUTDOOR AIR TEMPERATURE PROBE
LR	LIQUID RECEIVER	TE SD	INTAKE LINE TEMPERATURE PROBE
F	FILTER	TE DT	COMPRESSOR DISCHARGE TEMPERATURE PROBE
SV	FILLING CONNECTION	PSHC	AUTOMATIC RESET HIGH-PRESSURE SWITCH
HC	CRANKCASE HEATER		
MAF	AXIAL FAN		
MF	MUFFLER		
LS	LIQUID SEPARATOR		
RS	INTAKE LINE		
RD	DELIVERY LINE		
RL	LIQUID LINE		
RD/RS	DELIVERY/INTAKE LINE		
RS/RD	INTAKE/DELIVERY LINE		

6.6 REFRIGERANT DIAGRAM HP_OWER ONE 120R – 120RK

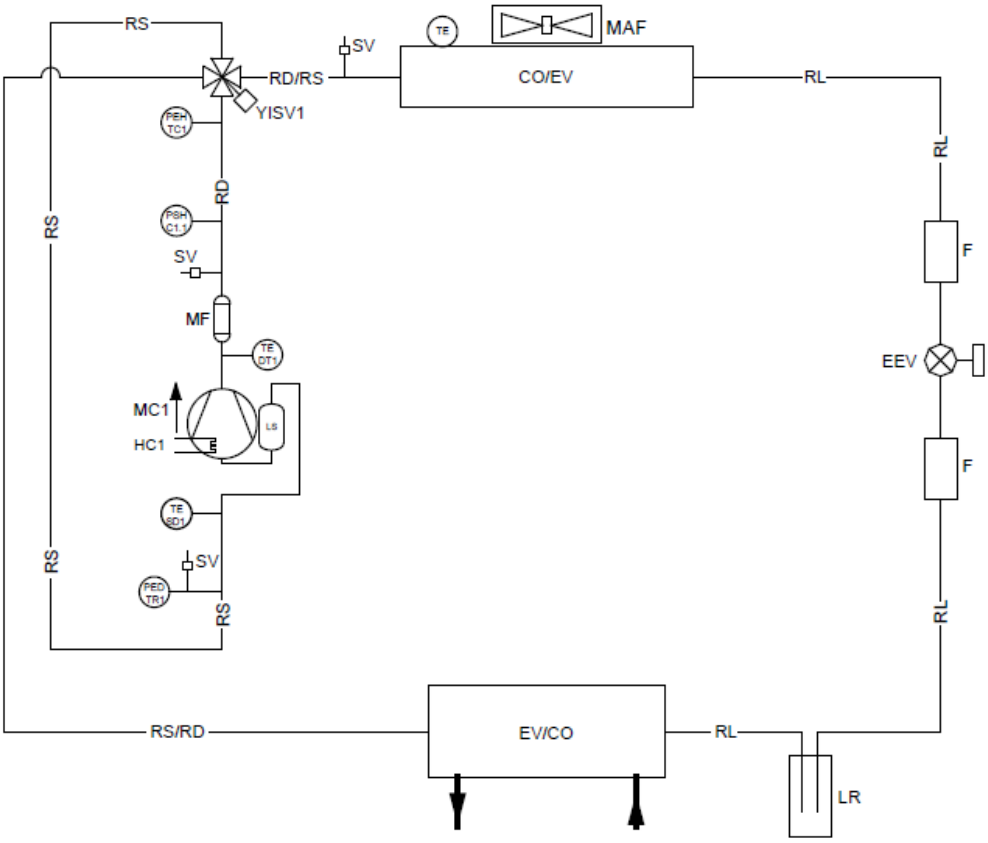

6.7 REFRIGERANT DIAGRAM HP_OWER ONE 140R - 140RK - 160RT – 160RTK - 180R - 180RK

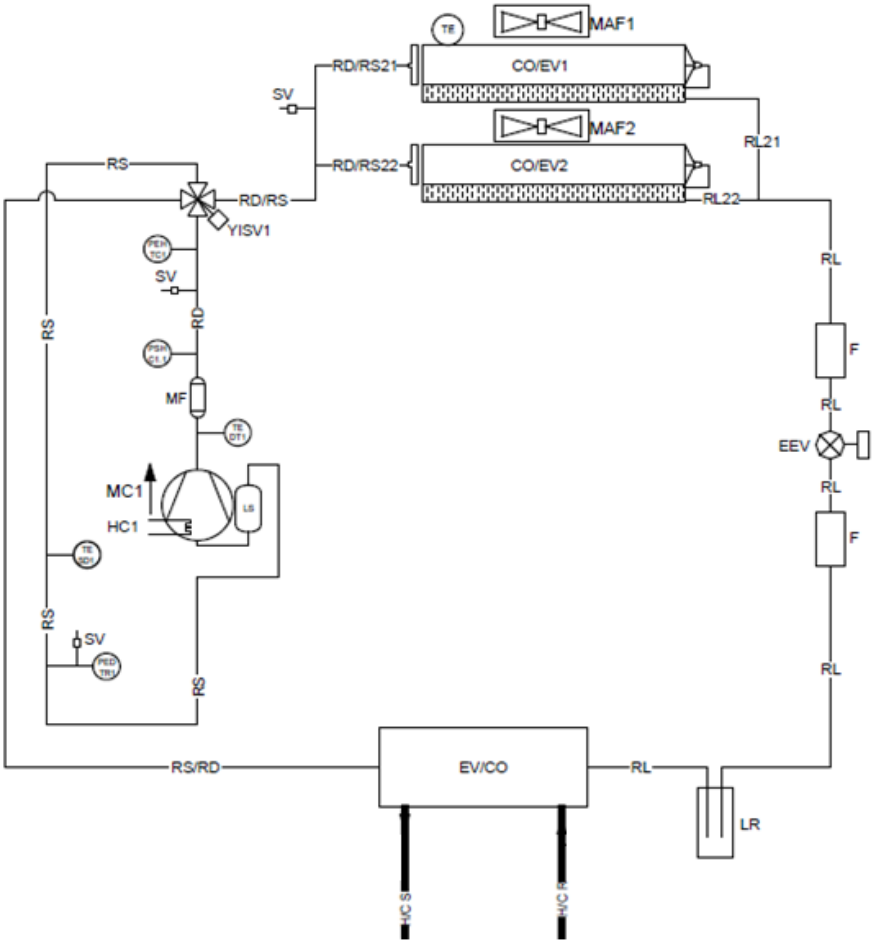

6.8 ELECTRICAL CONNECTIONS

Check that the power supply matches the unit's electric nominal data (voltage, phases, frequency) displayed on the rating plate on the unit's side panel. The electric power connections must be made in accordance to the wiring diagram enclosed with the unit and in conformity with national and international standards (providing general circuit breaker, residual current devices for each line, proper earthing of the plant, etc.).

	Before beginning any type of operation, make sure that power is disconnected.
	CAUTION: The electric panel is positioned below the cover. Respect the minimum clearances shown in chapter 6.3 to perform wiring.
	CAUTION: The installer is responsible for the disconnection system (e.g. general circuit breaker) upstream of the electrical connections of the unit.
	CAUTION: The supply voltage's fluctuations cannot exceed ±10% of the nominal value. If this tolerance should not be respected, please contact the electricity provider. The power supply has to respect the listed limits: failing this, the warranty will terminate immediately.
	CAUTION: If the supply cable is damaged, it must be replaced by qualified personnel, in order to prevent any risk
	CAUTION: The flow switch (element FL in the previous plumbing diagram and installed at the factory) must ALWAYS be connected according to the indications in the wiring diagram. Never jumper the connections of the flow switch in the terminal block. The warranty will no longer be considered valid if the connections of the flow switch have been altered or connected improperly.
	CAUTION: The remote control panel is connected to the water chiller by means of no.4 twisted shielded wires having a 1,5 mm^2 section, plus the Modbus ground conductor (eg CAT5 STP cable, connect the shield to ground at one end of the cable. The power supply cables have to be separated from the remote control wires. The maximum distance is 50m.
	CAUTION: The remote control panel cannot be installed in an area with strong vibrations, corrosive gases, excessive filth or high humidity. Leave the area near the chiller clear.

6.8.1 Access to the electric panel

The following is the procedure to remove the cover. The images show sizes 140R/RK - 160RT/RTK - 180R/RK but they also apply to the other sizes.

1. Undo the screws which secure the cover. Two on each side of the machine and two which secure the cover to the support of the cable glands. (There is just one fixing screw on the side of the smaller-sized controllers).
2. Remove the screws that fasten the cover of the electric panel and wire to the terminal block.
3. Insert the cable in the cable glands on the side of the machine to bring them outside of the unit.
4. Close the electric panel and the cover of the machine by reapplying the screws.

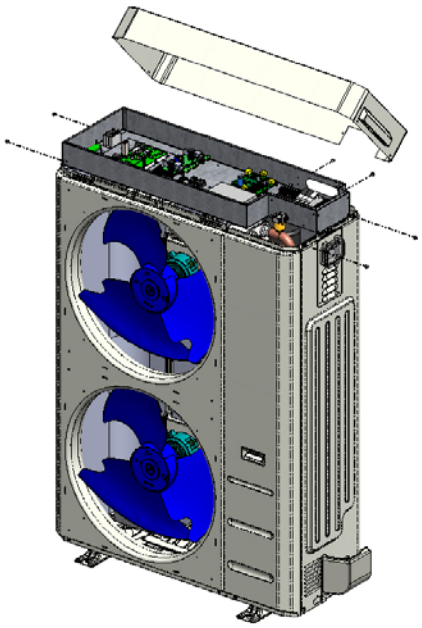

	The above-mentioned operations must be carried out with the machine off and power disconnected (by means of the specific disconnector applied by the installer). ***Operations carried out by qualified personnel.***
	Remove the cover without removing the support plate of the cable glands.
	When the work is finished, close all of the removed covers applying the screws and gaskets (if included).

6.8.2 Power supply

	The electrical wiring to the terminal blocks has to be done only by qualified personnel.
	Make sure to install an adequate ground connection, incomplete grounding can cause electric shock. The manufacturer cannot be held responsible for any damage caused by failure or ineffective earthing.

Power cables, electric protections and line fuses must be sized according to the specifications listed in the wiring diagram enclosed with the unit and in the electrical data contained in the table of technical characteristics (see Paragraph 0).

Use a dedicated power line, do not power the appliance through a line to which other users are connected. Fasten the power cables securely and make sure they do not come into contact with sharp corners. Use double insulated cables with copper wires.
Details on the type and nominal specifications of the fuses are set out on the machine's data plate, as well as on the fuses.
The earth connection must be carried out first during the connection phase, in another way it must be removed last when the unit is disconnected. In the event of any loosening of the power cable, it must be ensured that the voltage of the active conductors takes place before that of the earth wire.
A main switch or a disconnection device with adequate breaking capacity must be installed on the power supply line, which has a separation of the contacts in all the poles. The earth leakage breaker must be compatible with inverter appliances, it is recommended to install a type B differential switch, the installation of a different type switch could give rise to untimely trips.
The following table shows the recommended cable sections for a maximum length of 30 m. In any case, depending on the type of installation, the physical location and the length of the cables (whether less than or greater than 30m), the designer of the electrical system will make an appropriate choice.

Model	Power supply	Recommended cable section (maximum lenght 30 m)	Recommendetightening torque
HP_OWER ONE 70R/RK – 90R/RK	230V / 1ph	3 x 4 mm^2	L/N: 3,4 Nm – PE: 1 Nm
HP_OWER ONE 120R/RK	230V / 1ph	3 x 4 mm^2	L/N: 3,4 Nm – PE: 1 Nm
HP_OWER ONE 140R/RK	230V / 1ph	3 x 6 mm^2	L/N: 3,4 Nm – PE: 1 Nm
HP_OWER ONE 160RT/RTK	400V / 3ph	5 x 2,5 mm^2	L1/L2/L3: 3,4 Nm – N/PE: 1 Nm
HP_OWER ONE 180R/RK	400V / 3ph	5 x 4 mm^2	L1/L2/L3: 3,4 Nm – N/PE: 1 Nm

The units comply with the electromagnetic compatibility specifications, the designer of the electrical system must however make the appropriate assessments to ensure the absence of interference.

6.8.3 Connection terminal block

The connection terminal block is below the cover of the machine. To reach it, see the instructions in paragraph 5.8.1. The terminal block must be connected according to the following notes.

The connections indicated below are standard. Other connections are shown in the User interface instruction manual, depending on the configurations adopted.

	The electrical wiring to the terminal blocks has to be done only by qualified personnel.
	It is important to keep the high voltage cables separate from the very low voltage ones

USER TERMINAL BLOCK:

HP_OWER ONE 70R - 70RK - 90R - 90RK - 120R - 120RK - 140R - 140RK

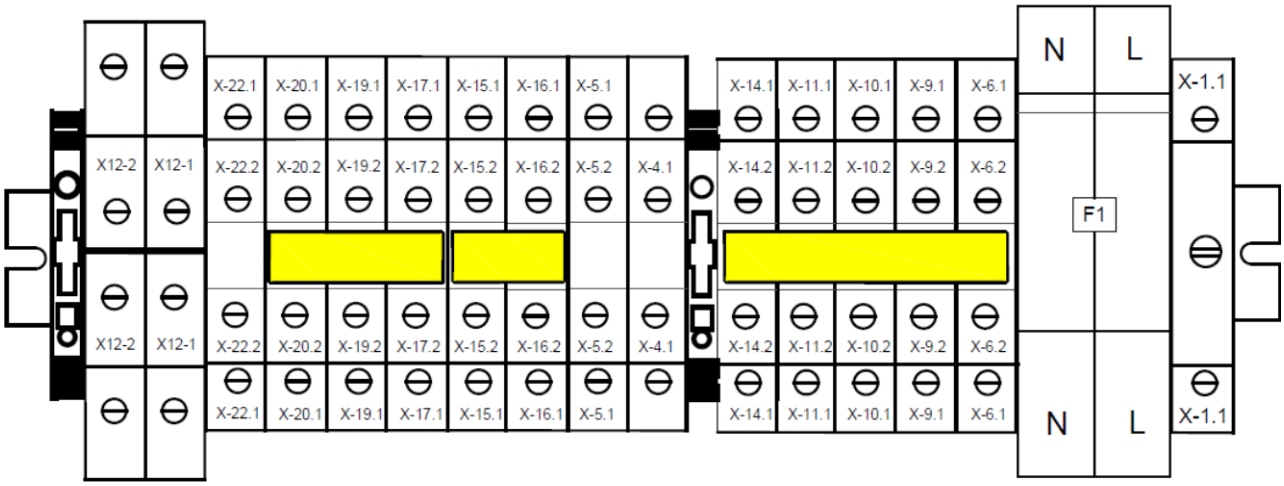

HP_OWER ONE 160RT - 160RTK - 180R - 180RK

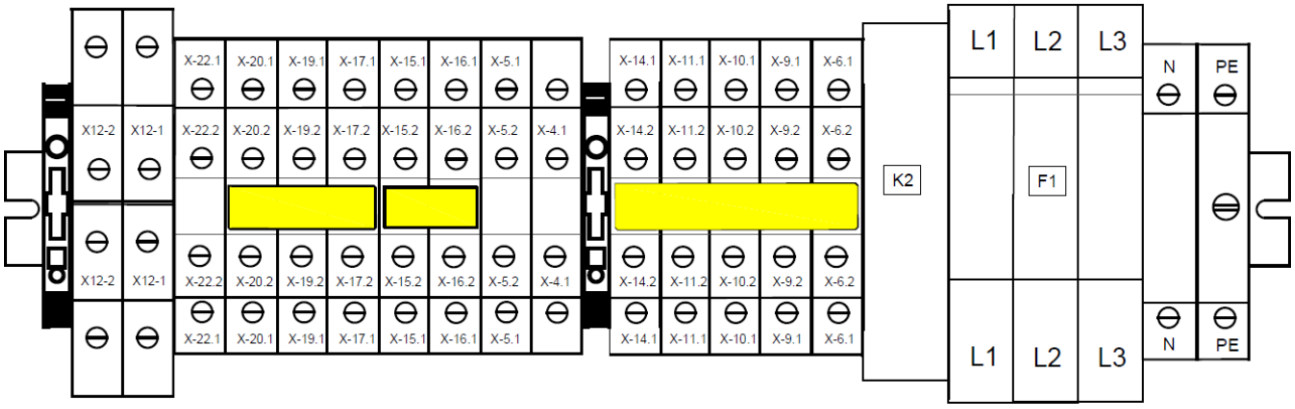

TERMINAL	CONNECTION	TYPE
X-1	Connect the earth cable	Power supply Input 1-Ph/N/PE, 230Vac, 50Hz
N	Connect the neutral cable from the mains	
L	Connect the phase cable from the mains	
PE	Connect the earth cable	Power supply Input 3-Ph/N/PE, 400 Vac, 50Hz. (only for HP_OWER ONE 160RT/RTK, HP_OWER ONE 180R/RK)
N	Connect the neutral cable from the mains	
L1	Connect the phase cable L1 from the mains	
L2	Connect the phase cable L2 from the mains	
L3	Connect the phase cable L3 from the mains	
X-5.2	Modbus RTU+ signal connection for remote control panel (R+)	Modbus communication
X-5.1	Modbus RTU- signal connection for remote control panel (R-)	
X-4.1	Connection of modbus RTU earth reference for remote control panel (GNDR)	
X-12.1	Remote Control Panel power supply (12V, 50Hz, 500mA)	Output for power supply 12Vac, 50Hz
X-12.2	Remote Control Panel power supply (12V, 50Hz, 500mA)	
X-17.1/X-17.2	Domestic hot water temperature probe / thermostat digital input	Analog (10KΩ NTC sensor at 25 ° C β 34-35) or digital input
X-19.1/19.2	Plant's remote temperature probe / thermostat digital input	Analog input (10KΩ NTC sensor at 25 ° C β 34-35) or digital input
X-20.1/X-20.2	Double set point / domestic hot water digital input	Digital input
X-22.2	0-10V (+) signal input to modify set point	Analogue input (ST10)
X-22.1	0-10V (-) signal input to modify set point	
X-6.1/X-6.2	Plant's electric heater	Under-voltage output single phase 230Vac, 50Hz, 2A resistive,
X-9.1/X-9.2	Exchanger heater (only in the version -K) / Available resource (in models without antifreeze kit)	Under-voltage output single phase 230Vac, 50Hz, 2A resistive
X-10.1/X-10.2	Base heater (only in the version -K) / Available resource (in models without antifreeze kit)	Under-voltage output single phase 230Vac, 50Hz, 2A resistive.
X-11.1/X-11.2	Domestic hot water valve output	Output 1- phase 230Vac, 50Hz, 2A resistives.
X-14.1/X-14.2	Double set-point valve output	Output 1- phase 230Vac, 50Hz, 2A resistives.
X-16.1/X16.2	Summer/winter mode change input from remote (to activate the function, see the relevant paragraph in the User interface instruction manual)	Voltage-free digital input
X-15.1/X15.2	Remote on/off input (closed=machine on / open=machine off)	Voltage-free digital input

7 STARTUP

Before start-up:

- Check that the diagrams and manuals of the installed machine are available.
- Check that the wiring and plumbing diagrams of the plant the machine is connected to are available.
- Check that the shut-off valves of the water circuits are open.
- Check that the water circuit was filled under pressure and the air vented.
- Check that all the plumbing connections are installed correctly and that all the indications on the rating plates are complied with.
- Make sure that measures have been taken to discharge condensate.
- Check the electrical connection and correct fastening of all the terminals.
- Check that the electrical connections have been made according to standards in force, including earthing.
- Voltage must match that on the unit's rating plate.
- Make sure that the electric voltage is within the tolerance limits (±10%).
- Check that the electric heaters of the compressors are properly powered.
- Check that there are no gas leaks.
- Before switching the unit on, check that all panels are positioned correctly and well-fixed with screws.

	Fill in the "First start request" form in the document envelope.

	CAUTION: The unit must be connected to the electric mains and placed in STANDBY (powered on) by closing the master switch at least 12 hours before start-up. This will allow the heaters to adequately warm up the compressor crankcase (the heaters are powered automatically when the switch is closed). The heaters are working properly if after a few minutes the temperature of the compressor crankcase is 10-15°C higher than ambient temperature.
	CAUTION: check that the weight of the pipes does not bear upon the machine structure.
	CAUTION: Never use the master switch to stop the unit temporarily. This must only be done to disconnect the unit from the power supply for long downtimes (e.g. seasonal stops etc.). Furthermore power is missing, the crankcase heaters will not be powered with the risk of breaking the compressors when the unit is switched on.
	CAUTION: Do not modify the electrical connections of the unit so as not to immediately terminate the warranty.
	CAUTION: Summer/winter operation must be selected at the start of the relative season. Frequent and sudden changes of this operation must be avoided so as not to damage the compressors.
	CAUTION: Upon initial installation and start-up, make sure that the machine works properly both in heating and cooling mode.

7.1 SWITCHING ON THE UNIT

To supply power to the machine activate the magnetothermic switch and, if present, turn the external handle of the disconnector to ON ("I").
The unit display only switches on if the phase sequence is correct (inspection to be made when commissioning the unit).
Wait at least 1 minute between switching the unit off and back on again.
The phase protection module (in the 160RT/RTK – 180R/RK models) detects the correct sequence of the supply phases L1, L2, L3. When the module activates due to lack of phase, the power supply to the control board is interrupted.

8 INSTRUCTIONS FOR THE USER

Write down the unit's identification data to be able to give it to the assistance centre when requesting an intervention.

	The identification plate applied on the machine has all of the technical and performance data of the appliance. In case of tampering, removal or deterioration, ask the Technical Assistance Service for a copy.
	Tampering, removal and deterioration of the identification plate complicates installation, maintenance and request for spare parts.

We recommend keeping track of the interventions carried out on the unit so as to make any troubleshooting easier.
In case of failure or malfunctioning:

- check the type of alarm triggered to report it to the assistance centre;
- contact an authorised assistance centre;
- if requested by the assistance centre, immediately deactivate the unit without resetting the alarm;
- request that original spare parts be used.

9 SHUTDOWNS FOR LONG PERIODS

The shutdown mode of the plant depends on the site of application and the time the plant is expected to be shut down. If the unit is equipped with the antifreeze system, even when off (system on unit at "off" position), the antifreeze system keeps running if power supply continuity to the equipment is guaranteed. If the system is expected to remain idle for a long period of time, it is recommended to empty the liquid from the system unless there is an adequate amount of glycol.
To switch off the unit completely after having emptied the system:

- Switch off the unit setting the switch of each appliance at "OFF".
- Close the water valves
- Set the general residual current device at "OFF" (if installed upstream of the system).

	If the temperature drops below zero there is serious danger of frost: provide a mixture of water and glycol in the system, otherwise drain the water system and the circuits of the heat pump.
	CAUTION: even the transient operation, with water temperatures below +5°C is not guaranteed on the basis of the limits established in Paragraph 15.4. Before you turn the unit back on after a long idle period, make sure that the temperature of the mixture of water and glycol is higher than or at least equal to +5°C.

10 MAINTENANCE AND PERIODIC CHECKS

	CAUTION: All the operations described in this chapter MUST BE CARRIED OUT BY QUALIFIED PERSONNEL ONLY. Before performing any intervention on the unit or accessing internal parts, make sure you have disconnected power. The heads and delivery pipe of the compressor are normally quite hot. Be careful when working near the condensing coils. The aluminium fins are very sharp and can cause serious injuries. After servicing operations, re-install the cover panels, and fix them by means of screws.
	CAUTION: Before starting to operate, safety checks must be performed to ensure the combustion hazard is reduced to the minimum. The work must be undertaken according to a controlled procedure, to reduce to the minimum the risk of flammable gases or vapours while performing the work. The area must be checked with an appropriate refrigerant fluid detector before and during the work.
	It is prohibited to fill the refrigerant circuits with a refrigerant other than that indicated on the identification plate. Using a different refrigerant can cause serious damage to the compressor.
	It is prohibited to use oils other than those indicated in this manual. Using a different oil can cause serious damage to the compressor
	The heads and delivery pipe of the compressor are normally quite hot.
	Be careful when working near the condensing coils. ***The aluminium fins are very sharp and can cause serious injuries.***
	After the maintenance operations, close the panels by fixing them with screws.
	It is recommended to have specialised personnel perform periodical inspections and maintenance. The EU regulation n.517/2014 establishes that users must perform regular inspections on the plants, checking water tightness and eliminating any leaks as quickly as possible. Verify the mandatory nature and the documentation required in regulation n.517/2014 and its subsequent amendments or repeals.

It is a good rule to carry out periodic checks in order to verify the proper operation of the unit.

The list of operations to be performed is shown in the following table.

OPERATION	
Filling the water circuit.	x
Presence of bubbles in the water circuit.	x
Check the proper working of the safety and control devices.	x
Check that there are no oil leaks from the compressor.	x
Check if there is a possible water leakage from the water circuit.	x
Check that the flow switch works properly.	x
Check that the crankcase heaters are powered and running.	x
Clean the metal filters of the water circuit.	x
Clean the finned coil with compressed air or water jet	x
Check that the electric terminals both inside the electric panel and in the terminal blocks of the compressor are well tightened.	x
Tightening of plumbing connections.	x
Check fixing and balancing of the fans.	x
Correct electric voltage and phase imbalance (empty and under load).	x
Correct absorption.	x
Check the refrigerant charge and any losses	x
Check the operating pressure, superheating and sub-cooling.	x
Circulation pump efficiency.	x
Check presence of corrosions	x
Check panel fastening	x
Check the water quality (see chapter Characteristics of the system water) and the possible concentration of glycol	x
Check the hydronic side safety valve	x

Maintenance operations must be reported on the Maintenance Log shown at the end of this manual, signed and stamped by a certified company.

10.1 CLEANING THE FINNED COIL

To correctly clean the coil, follow the instructions below:
a) Remove any superficial filth. Debris such as leaves, fibres etc. must be removed without a vacuum cleaner (use a brush or another soft tool carefully avoiding scratching with metal or abrasive parts). If you use compressed air, pay attention to keep the air flow perpendicular to the surface of the coil in order not to bend the aluminium fins. Pay attention not to bend the fins with the nozzle of the compressed air lance.
b) Rinse. Rinse with water. It is possible to use chemical substances (specific detergents for finned coils). Rinse the coils by letting the water run inside each individual passage of the fins, until they are perfectly clean. Pay attention to direct the water jet perpendicular to the surface of the coil in order not to bend the aluminium fins. Do not strike the coil with the water hose. Apply your thumb at the end of the hose to increase the pressure of the water jet instead of using specific nozzles which could damage the coil.

10.1.1 Cleaning the finned coils treated with the anti-corrosion method

The anti-corrosion treatment applied to the finned coils guarantees protection against aggressive atmospheres.

The frequency of cleaning depends on the environmental conditions and is left to the common sense of the maintenance staff. When oxidizing dust or grease particles are observed on the battery surface, cleaning is recommended. In general, in a slightly polluted atmosphere, it is recommended to carry out the cleaning treatment every three months.

Washing should be carried out with preferably hot water (40-60 °C) and detergent with neutral pH, while rinsing is carried out with abundant fresh water (50 l / m^2).

If the maintenance staff observes a lack of protective cover on the edge of the fins, it is necessary to contact the nearest assistance center to proceed with a new application of the cover and completely restore the protection against corrosion.

	CAUTION: Do not clean the coil using high-pressure cleaners so as not to apply excessive pressure which could cause irreparable damage. Damage caused by cleaning with unsuitable chemical substances or excessively high water pressure will not be recognised under warranty.
	CAUTION: The aluminium fins are thin and sharp. Pay the utmost attention and use appropriate PPE to avoid cuts and abrasions. Cover your eyes and face appropriately to avoid squirting water and filth while blowing. Wear waterproof shoes or boots and clothing covering your entire body.
	For units installed in aggressive atmospheres with a high fouling rate, cleaning of the coil must be part of the routine maintenance program. In these types of installations, all of the dust and particulates deposited on the coils must be removed as soon as possible through regular cleaning according to the methods shown above.

10.2 EXTRAORDINARY MAINTENANCE

All extraordinary maintenance jobs must be carried out by an authorised assistance centre.

10.3 ENVIRONMENTAL PROTECTION

Legislation regulating the use of substances harmful for the ozone layer establishes the prohibition of releasing refrigerant gases into the environment. In fact at the end of their service life, these must be retrieved and handed over to specific collection facilities. The R32 refrigerant is mentioned among substances subject to the special controls set forth by law and therefore must abide by the obligations indicated above. **Special attention is therefore recommended during maintenance so as to reduce refrigerant leaks as far as possible.**

11 DECOMMISSIONING

Once the unit has reached the end of its life cycle and needs to be replaced, the following operations are recommended:

- the refrigerant has to be recovered by trained personnel and sent to proper collection centres;
- any antifreeze additives in the water circuit must be recovered and disposed of properly;
- the compressors' lubricating oil has to be collected and sent to proper collection centres;
- the electronic components, such as regulators, driver boards and inverters, must be disassembled and sent to proper collection centres;
- the structure and the different components, if unusable, must be scrapped and divided according to their nature; there is especially a good amount of copper and aluminium in the machine.

These operations allow easy material recovery and the recycling process, thus reducing the environmental impact.
The user is responsible for the proper disposal of this product, according to national regulations in the country of destination of the appliance. For more information you should contact the Installation Company or local competent authority.

	An incorrect decommissioning of the appliance may create serious environmental damage and endanger people's safety. Therefore, it is recommended that the unit be disposed only by authorised persons with technical training who have attended training courses acknowledged by the competent authorities.
	It is required to follow the same precautions described in the previous paragraphs.
	Pay special attention during disposal of the refrigerant gas.
	The illegal disposal of the product by the end user leads to the application of the penalties in accordance with the law in the country where the disposal takes place.
	The crossed-out bin symbol applied on the appliance indicates that the product, at the end of its useful life, <u>must be collected separately from other solid/municipal waste</u>. ***The units are manufactured in accordance with the EC directive on waste of electric/electronic equipment and the harmful effects of incorrect disposal are provided in the user/installer manual. The manufacturing company or its importer/retailer is available to respond to any requests for additional information.***

11.1 Residual risks

This paragraph sets forth any residual risks which cannot be eliminated by the manufacturer in the design stage.

Risk due to:	Precautions/Corrections
Handling	There is always the risk of the unit falling or tipping over during handling. Follow the instructions in the "Handling" section and take all of the precautions foreseen according to local regulations.
Installation	Unsuitable installation can cause water leaks, gas leaks, electric shocks, fire hazards, malfunctioning or damage of the unit. Only qualified technical personnel can perform installation. Place the unit in an appropriate area and without the risk of flammable gas leaks. Make the installation zone inaccessible to third parties.
Dust/Water in the electric panel	Fasten the panel of the electrical switchgear correctly. Any infiltrations can cause shocks and short-circuits causing personal harm and damage to property or to the unit itself. Pay special attention to the earthing connection.
Maintenance	During maintenance, which must always be carried out by authorised personnel, make sure that the disconnector is off and that no one can accidentally modify the disconnection measures of the appliance from the unit by means of specific warnings and an adequate padlock.
Fan	Contact with the fan can cause injury and/or death. Do not access the unit or remove the protections while the fan is running.
Refrigerant gas leakage	Wear suitable PPE as a gas leakage could cause injury and intoxication. Carefully read the "Safety data sheet of the refrigerant" included in the manual. Do not make use of heat sources near the circuit before it is completely discharged.
Water leaks	These can cause personal harm and property damage and risk a short circuit. We recommend positioning the shut-off valves.

■ All personnel working on the refrigeration circuit must be able to present a certificate of competence, issued by an organization with industrial accreditation. This certificate confirms, through industry standard procedures, their competence in the safe management of refrigerants.

■ Maintenance operations can only be carried out in compliance with the manufacturer's specifications. If maintenance and repair operations require assistance from additional personnel, the person qualified for the management of flammable refrigerants must constantly supervise the work.

■ Before starting any operation on devices with flammable refrigerant, safety checks must be carried out in order to minimize the risk of ignition. Take the following measures before working on the cooling circuit:

Measurement		Completed	Notes
1	**General working environment:** ■ Inform the following people of the type of operation to be performed: - All maintenance personnel - All people in the vicinity of the plant. ■ Delimit the area around the heat pump. ■ Check for flammable materials and ignition sources in the immediate vicinity of the heat pump: Remove all flammable materials and sources of ignition.		
2	**Check for refrigerant** ■ In order to identify a flammable atmosphere in time: Check before, during and after work, the presence of any leaks of refrigerant in the surrounding area using a detector of refrigerant suitable for R32 gas and explosion proof. Said coolant detector must not generate sparks and must be properly sealed.		
3	**Fire extinguisher** A CO2 or powder extinguisher must be kept close at hand in cases where: ■ The coolant is topped up. ■ Soldering or soldering / soldering / soldering operations are performed		

Measurement		Completed	Notes
4	**Trigger Sources** ■ Never use ignition sources, which could ignite the refrigerant, when carrying out operations on the cooling circuit which contains, or contained, flammable refrigerant. Remove all possible sources of ignition, including cigarettes, from the area where installation, repair, dismantling or disposal operations are being carried out, which may lead to a leak of refrigerant. ■ Before starting work, check for flammable materials and ignition sources in the immediate vicinity of the heat pump: Remove all flammable materials and ignition sources. ■ Display the no-smoking signs.		
5	**Ventilate the work area** ■ Carry out the repair work outdoors or provide adequate ventilation of the work area, before working on the refrigerant circuit, or starting any soldering or soldering / soldering operations. ■ It is necessary to maintain ventilation for the entire duration of the operations. Ventilation must be able to thin out any gas leaks and, preferably, disperse them into the atmosphere.		

Measurement		Completed	Notes
6	**Check the refrigeration system** ■ Each spare electrical component must be suitable for use and comply with the manufacturer's specifications. Replace defective components only with original spare parts. ■ Perform all component replacement operations in accordance with the guidelines. If necessary, consult Technical Support. Carry out the following checks: ■ The refrigerant charge must not be higher than what is allowed for the installation environment. ■ Check the functionality of the ventilation system. The ventilation holes must not be blocked or blocked. ■ If a separate hydraulic system is used, check for the presence of refrigerant on the secondary circuit. ■ Symbols and labels must always be clearly visible and legible. Replace any illegible information panels. ■ The refrigerant lines, and related components, must be installed in such a way that they do not come into contact with substances capable of causing corrosion. Unless the refrigerant lines are not made of corrosion-resistant materials, or are safely protected against corrosion.		
7	**Checks on electrical components** ■ Safety checks must be carried out for the maintenance and repair of electrical components: See below. ■ In the event of a safety-related fault, do not connect the system until said fault has been repaired. If it is not possible to immediately repair the fault, provide a temporary solution suitable for the operation of the system, if necessary. Inform the operator of the system. Perform the following security checks: ■ Discharge the condensers: Make sure that no sparks are generated during the discharge operations. ■ When filling or extracting the refrigerant, or emptying the refrigerant circuit, do not place any live electrical component or cable in the immediate vicinity of the device. ■ Check the earth connection.		

Measurement		Completed	Notes
8	**Repairs on sealed connectors** ■ During operations on sealed components, completely isolate the device from the power supply, before removing the sealed covers. ■ If, during operations, the power supply is absolutely necessary: Position a continuously operating refrigerant detector in the most critical places, so that it emits a warning signal in case of potentially dangerous situations. ■ Pay particular attention that any operation on the electrical components does not entail changes to the connectors which could influence their protective properties. These include damage to the feet; too many connections to a single terminal; connections that do not correspond to the manufacturer's specifications; damage to seals; and incorrect installation of the cable entries. ■ Make sure the device is installed correctly. ■ Verify that the seals are secured in place. Check to make sure that the seals effectively prevent the entry of a flammable atmosphere. Replace defective seals **Please note that** Used as a sealant, silicone can affect on devices for detecting leaks. Do not use silicone as a sealant. ■ Spare parts must comply with the manufacturer's specifications. ■ Work on components suitable for flammable atmospheres: It is not imperative that these components are isolated from the power supply.		
9	**Repair operations on components suitable for flammable atmospheres** ■ Do not connect any capacitive or continuous inductive loads to the device unless you have made sure not to exceed the allowable voltage and current. ■ In areas with flammable atmospheres, apply voltage only to components suitable for flammable atmospheres. ■ Use only original or approved parts. In the event of a leak, the use of other parts may result in the ignition of the refrigerant.		
10	**Wiring** ■ Check that the electrical connection is not subject to wear, corrosion, tension, vibration, sharp edges or other unfavorable environmental conditions. ■ When checking, also take into account the effects of time and continuous vibrations on the compressor and fans.		
11	▪ **Refrigerant detectors** ■ Do not, for any reason, use possible sources of ignition to detect any leaks or leaks of refrigerant. ■ Leak detection lamps or other open flame detectors must not be used.		

Measurement		Completed	Notes
12	**Leak detection** The following leak detection methods are suitable for plants with flammable refrigerant: Leak detection by electronic refrigerant leak detector: ■ Electronic refrigerant leak detectors may not have the required sensitivity or may need to be calibrated for the relevant range. Perform the calibration operations in an area free of refrigerant. ■ The leak detector must be suitable for the detection of R32 refrigerant gas. ■ The leak detector must not contain any ignition source. ■ Calibrate the leak detector according to the refrigerant used. Set the response threshold to <3 g / a, suitable for propane. Leak detection by leak detection liquids: ■ Leak detection liquids are suitable for use with most refrigerants. **Please note that** The chlorine contained in some leak detection liquids can react with the refrigerant. This can cause corrosion. Do not use leak detection liquids containing chlorine. Necessary measures in case of leakage from the cooling circuit: ■ Immediately extinguish any open flame near the heat pump. If it is necessary to carry out soldering / soldering operations to repair the leak, it is always necessary to remove all the refrigerant from the cooling circuit. Before and during tin soldering / soldering operations with oxygen-free nitrogen, expel the refrigerant from the area to be soldered / soldered tin.		
13	**Removal and evacuation** When working inside the refrigerant circuit to carry out repairs or for any other reason, conventional procedures must be followed. However, it is important to follow best practice as there is a danger of flammability is a possibility. The following procedure should aim to: - remove the refrigerant fluid; - purge the circuit with an inert gas; - evacuate; - purge again with an inert gas; - open the circuit by cutting or by brazing. The charge of the refrigerating fluid must be kept in the appropriate guard cylinders. The system must be "cleaned" with OFN to make the unit safe. It may be necessary to repeat this process several times. Compressed air or oxygen should not be used for this work. Cleaning is obtained by interrupting the vacuum condition in the system with OFN and continuing to fill until the operating pressure is reached, creating an outlet towards the atmosphere and, finally, recreating the vacuum condition. This process must be repeated until there is no trace of refrigerant fluid in the system. When using the last OFN refill, the system must be at atmospheric pressure to allow it to be able to work. This operation is of vital importance in the event that it is necessary to carry out brazing operations on the pipe network. Make sure that for each of the ignition sources the outlet duct of the depressurization pump is not closed and that there is ventilation.		
14	**Top-up procedures** In addition to conventional charging procedures, the following requirements must be adhered to. - Make sure that when using a refill equipment, contamination between different refrigerant fluids does not occur. Hoses or pipes must be as short as possible to minimize the amount of refrigerant fluid they contain.		

Measurement		Completed	Notes
	- The cylinders must be kept vertical. - Make sure that the refrigeration system is grounded before proceeding to recharge the system with the refrigerant fluid. - Label the system when charging is complete, (if not already done). - Particular care must be taken not to overload the refrigeration system. Before recharging, the system must be subjected to the pressure test with OFN. The system must undergo a leak test at the end of charging but before putting it into operation. An additional leak test must be performed before leaving the site.		
15	**Decommissioning** Before carrying out this procedure, it is essential that the technician is totally familiar with the apparatus and every detail of it. It is good practice that all refrigerant fluids are safely stored. Before carrying out the work, samples of oil and refrigerant must be taken in case an analysis is required before using the refrigerant again. It is essential that electricity is available before starting work. a) Become familiar with the equipment and its operation. b) Isolate the system from an electrical point of view. c) Before trying the procedure, make sure that: - a mechanical maneuvering device is available, if required, to handle the cylinders of the refrigerant fluids; - all personal protective equipment is available and used correctly; - that the recovery process is constantly under the control of a competent person; - that the recovery apparatus and the cylinders comply with the relevant standards. d) Depressurize the cooling system, if possible. e) If the vacuum cannot be obtained, connect a manifold so that the refrigerant fluid can be removed from various parts of the system. f) Make sure that the cylinder is located on the scale before recovery takes place. g) Start the recovery machine and operate it according to the manufacturer's instructions. h) Do not overfill the cylinders (no more than 80% by volume of the refill liquid). i) Do not exceed, even temporarily, the maximum operating pressure of the cylinder. j) When the cylinders have been correctly filled and the process is finished, check that the cylinders and the equipment are removed promptly from the site and that all the isolation valves of the appliance are closed. k) Recovered refrigerant fluids must not be loaded into another refrigeration system unless they have been cleaned and checked.		
16	**Identification** (labeling of the heat pump) If the heat pump is taken out of service, post a label with a signature and date in a clearly visible position, which contains the following information: ■ The refrigerant is flammable. ■ The plant has been taken out of service. ■ The coolant has been removed.		
17	**Recovery** When removing refrigerant fluids from a system, either for maintenance or for decommissioning, it is good practice that this is done safely. When transferring the refrigerant fluid into the cylinders, check that only cylinders suitable for the recovery of refrigerant fluids are used. Make sure that the exact number of cylinders is available for contain the total system charge. All the cylinders to be used are designated for the refrigerant fluid guarded and labeled for that refrigerant fluid (i.e., special cylinders for the		

Measurement		Completed	Notes
	refrigerant fluid storage). The cylinders must be complete with a pressure relief valve and associated shut-off valves, in good working order. The cylinders of Empty cases are collected and, if possible, cooled before recovery takes place. The recovery apparatus must be in good operating condition with a series of instructions relating to the apparatus that is being managed and must be suitable for the recovery of fluids flammable refrigerants. A set of calibrated weighing scales must also be available. The pipes must be equipped with connections for disconnection that do not leak and are in good operating condition. Before using the recovery machine, check that it is in a satisfactory condition of use, that it has had proper maintenance and that any associated electrical components are sealed to prevent ignition in case of leakage of refrigerant fluid. Consult the manufacturer if in doubt. The recovered refrigerant fluid must be returned to the supplier of the refrigerant fluid in the appropriate recovery cylinder, drawing up the relative Waste Transfer Note. Do not mix the refrigerant fluids in the recovery units and, in particular, not in the cylinders. If the compressors or their oils need to be removed, make sure they have been emptied to an acceptable level to ensure that the flammable refrigerant fluid does not remain in the lubricant. The evacuation process must be carried out before the compressor returns to the suppliers. Only electric heating to the compressor body must be used to speed up this process. The drainage of oil from a system must be performed safely.		

12 TECHNICAL DATA

12.1 TECHNICAL SHEET

TECHNICAL SPECIFICATIONS		Unit of measurement	Model HP_OWER ONE		
			70R-70RK	90R-90RK	120R-120RK
Cooling	Cooling capacity (1) min/nom/max	kW	4,82 / 6,18 / 6,80*	4,91 / 7,72 / 8,49*	6,41 / 11,60 / 12,76*
	Input power (1)	kW	1,28	1,76	2,79
	E.E.R. (1)	W/W	4,82	4,38	4,16
	Cooling capacity (2) min/nom/max	kW	3,20 / 5,02 / 5,52*	3,80 / 6,08 / 6,69*	4,55 / 8,51 / 9,36*
	Input power (2)	kW	1,60	1,99	2,79
	E.E.R. (2)	W/W	3,14	3,05	3,05
	SEER (5)	W/W	4,12	4,25	4,25
	Water flow rate (2)	l/s	0,24	0,28	0,41
	User side heat exchanger pressure drops (2)	kPa	2,0	2,8	8,8
	Nominal useful head (2)	kPa	78,8	76,0	63,4
Heating	Heating capacity (3) min/nom/max	kW	3,95 / 6,08 / 6,99*	3,95 / 7,81 / 8,98*	5,33 / 11,80** / 13,57*
	Input power (3)	kW	1,35	1,78	2,73***
	C.O.P. (3)	W/W	4,51	4,38	4,32
	Heating capacity (4) min/nom/max	kW	3,82 / 5,88 / 6,76*	3,80 / 7,58 / 8,72*	5,13 / 11,47 / 13,19*
	Input power (4)	kW	1,66	2,17	3,33
	C.O.P. (4)	W/W	3,54	3,50	3,44
	SCOP (6)	W/W	4,46	4,46	4,47
	Water flow rate (4)	l/s	0,28	0,37	0,55
	User side heat exchanger pressure drops (4)	kPa	2,1	3,3	13,1
	Nominal useful head (4)	kPa	75,8	66,3	43,4
	Energy efficiency water 35°C / 55°C	Class	A+++/A++	A+++/A++	A+++/A++
Compressor	Type		Twin Rotary DC Inverter	Twin Rotary DC Inverter	Twin Rotary DC Inverter
	Refrigerant oil (type)		ESTEL OIL RB74AF	ESTEL OIL RB74AF	ESTEL OIL VG74
	Number of compressors		1	1	1
	Oil charge (amount)	l	0,67	0,67	1
	Refrigerant circuits		1	1	1
Refrigerant	Type		R32	R32	R32
	Refrigerant charge (7)	kg	1,5	1,5	2,5
	Amount of refrigerant in equivalent CO_2 tonnes (7)	ton	1,0	1,0	1,7
	Design pressure (high/low) heat pump mode	bar	42,8/1,3	42,8/1,3	42,8/1,3
	Design pressure (high/low) chiller mode	bar	42,8/3,5	42,8/3,5	42,8/3,5
External zone fans	Type Number		DC Brushless Motor	DC Brushless Motor	DC Brushless Motor
	Type		1	1	1
Internal heat exchanger	Internal heat exchanger type		Plates	Plates	Plates
	No. internal heat exchangers		1	1	1
	Water content	l	0,9	0,9	1,2
Water circuit	Water content of hydronic circuit	l	1,4	1,4	1,8
	Maximum water side pressure	bar	6	6	6
	Plumbing fittings	inch	1"M	1"M	1"M
	Minimum water volume	l	40	40	60
	Nominal circulator output	kW	0,075	0,075	0,075
	Maximum circulator output	kW	0,075	0,075	0,075
	Max circulator absorbed current	A	0,38	0,38	0,38
	Energy Efficiency Index (EEI) circulator		≤ 0,21	≤ 0,21	≤ 0,21
Noise level	Sound power level L_w (8)	dB(A)	64	64	65
	Sound pressure level at a distance of 1m L_{p1} (9)	dB(A)	49,8	49,8	50,4
	Sound pressure level at a distance of 10m L_{p10} (9)	dB(A)	32,8	32,8	33,7
Electrical data	Power supply		230V/1/50Hz	230V/1/50Hz	230V/1/50Hz
	Maximum input power	kW	3,5	3,9	5,1
	Maximum input current	A	15,1	17,0	22,1
	Maximum input power (version -K)	kW	3,6	4,0	5,2
	Maximum input current (version -K)	A	15,6	17,6	22,7

TECHNICAL SPECIFICATIONS		Unit of measurement	Model HP_OWER ONE		
			70R-70RK	90R-90RK	120R-120RK
Dimensions and weights	A - Length	mm	924	924	1047
	B - Depth	mm	377	377	455
	C - Height	mm	828	828	936
	Shipping weight	kg	84	84	110
	Operating weight	kg	72	72	96
Dimensions with packaging	A - Length	mm	970	970	1080
	B - Depth	mm	395	395	510
	C - Height	mm	985	985	1130

TECHNICAL SPECIFICATIONS		Unit of measurement	Model HP_OWER ONE		
			140R-140RK	160RT-160RTK	180R-180RK
Cooling	Cooling capacity (1) min/nom/max	kW	9,17 / 14,00 / 14,70*	9,20 / 15,80 / 16,59*	9,09 / 17,10 / 17,96*
	Input power (1)	kW	2,59	3,15	3,59
	E.E.R. (1)	W/W	5,40	5,02	4,76
	Cooling capacity (2) min/nom/max	kW	6,87 / 11,48 / 12,05*	5,99 / 13,80 / 14,49*	6,86 / 15,04 / 15,79*
	Input power (2)	kW	3,53	4,38	4,88
	E.E.R. (2)	W/W	3,25	3,15	3,08
	SEER (5)	W/W	4,62	4,80	4,91
	Water flow rate (2)	l/s	0,55	0,66	0,71
	User side heat exchanger pressure drops (2)	kPa	12,9	17,5	20,6
	Nominal useful head (2)	kPa	75,0	62,3	55,6
Heating	Heating capacity (3) min/nom/max	kW	7,54 / 14,10 / 15,23*	7,36 / 16,30 / 17,60*	7,30 / 17,90 / 19,33*
	Input power (3)	kW	2,91	3,49	4,07
	C.O.P. (3)	W/W	4,85	4,67	4,40
	Heating capacity (4) min/nom/max	kW	7,23 / 13,56 / 14,64*	7,06 / 15,77 / 17,03*	7,02 / 17,32 / 18,71*
	Input power (4)	kW	3,55	4,24	4,92
	C.O.P. (4)	W/W	3,82	3,72	3,52
	SCOP (6)	W/W	4,48	4,49	4,46
	Water flow rate (4)	l/s	0,65	0,76	0,83
	User side heat exchanger pressure drops (4)	kPa	13,0	17,6	21,0
	Nominal useful head (4)	kPa	63,6	48,5	37,3
	Energy efficiency water 35°C / 55°C	Class	A+++/A++	A+++/A++	A+++/A++
Compressor	Type		Twin Rotary DC Inverter	Twin Rotary DC Inverter	Twin Rotary DC Inverter
	Refrigerant oil (type)		ESTEL OIL VG74	ESTEL OIL VG74	ESTEL OIL VG74
	Number of compressors		1	1	1
	Oil charge (amount)	l	1,4	1,4	1,4
	Refrigerant circuits		1	1	1
Refrigerant	Type		R32	R32	R32
	Refrigerant charge (7)	kg	3,6	4	4
	Amount of refrigerant in equivalent CO_2 tonnes (7)	ton	2,4	2,7	2,7
	Design pressure (high/low) heat pump mode	bar	42,8/1,3	42,8/1,3	42,8/1,3
	Design pressure (high/low) chiller mode	bar	42,8/3,5	42,8/3,5	42,8/3,5
External zone fans	Type Number		DC Brushless Motor	DC Brushless Motor	DC Brushless Motor
	Type		2	2	2
Internal heat exchanger	Internal heat exchanger type		Plates	Plates	Plates
	No. internal heat exchangers		1	1	1
	Water content	l	1,7	1,7	1,7
Water circuit	Water content of hydronic circuit	l	3,0	3,0	3,0
	Maximum water side pressure	bar	6	6	6
	Plumbing fittings	inch	1"M	1"M	1"M
	Minimum water volume	l	60	70	70
	Nominal circulator output	kW	0,14	0,14	0,14
	Maximum circulator output	kW	0,14	0,14	0,14
	Max circulator absorbed current	A	1,10	1,10	1,10
	Energy Efficiency Index (EEI) circulator		≤ 0,23	≤ 0,23	≤ 0,23
Noise level	Sound power level L_w (8)	dB(A)	68	68	68
	Sound pressure level at a distance of 1m L_{p1} (9)	dB(A)	52,7	52,7	52,7
	Sound pressure level at a distance of 10m L_{p10} (9)	dB(A)	36,6	36,6	36,6

TECHNICAL SPECIFICATIONS		Unit of measurement	Model HP_OWER ONE		
			140R-140RK	160RT-160RTK	180R-180RK
Electrical data	Power supply		230V/1/50Hz	400V/3P+N+T/50Hz	400V/3P+N+T/50Hz
	Maximum input power	kW	6,6	7,0	8,3
	Maximum input current	A	28,6	10,1	12,0
	Maximum input power (version -K)	kW	6,7	7,1	8,5
	Maximum input current (version -K)	A	29,2	10,3	12,2
Dimensions and weights	A - Length	mm	1044	1044	1044
	B - Depth	mm	448	448	448
	C - Height	mm	1409	1409	1409
	Shipping weight	kg	134	154	154
	Operating weight	kg	121	141	141
Dimensions with packaging	A - Length	mm	1100	1100	1100
	B - Depth	mm	490	490	490
	C - Height	mm	1605	1605	1605

Performance referring to the following conditions:
(1) Cooling: outdoor air temperature 35°C; in/out water temperature 23/18 °C
(2) Cooling: outdoor air temperature 35°C; in/out water temperature 12/ 7°C.
(3) Heating: outdoor air temperature 7°C DB 6°C WB; in/out water temp 30/35°C.
(4) Heating: outdoor air temperature 7°C DB 6°C WB; in/out water temp 40/45°C.
(5) Cooling: in/out water temperature 7/12°C.
(6) Heating: average climatic conditions; Tbiv=-7°C; in/out water temp 30/35°C.
(7) Indicative data subject to changes. For the correct value, always refer to the technical label on the unit.
(8) Sound power level: full load unit in heating mode according to EU Regulation 813/2013 for medium and low temperature applications. Value determined on the basis of measurements carried out in accordance with EN 12102-1: 2017, used in conjunction with UNI EN ISO 9614-2 which describes the test with the Intensimetric method. The tolerance on the value of the total sound power level is 2 dB (A).
(9) Sound pressure level: value calculated from the sound power level using ISO 3744:2010, considering the units in the open field
(*) activating the "maximum Hz" function
(**) Heating Capacity regulated at 11.30kW for applications in hybrid systems
(***) Input Power 2,61kW for applications in hybrid systems

Performance data declared in points (1), (2), (3) and (4) is intended to refer to instantaneous power according to UNI EN 14511. The value declared in point (5) and (6) is determined according to UNI EN 14825.

CAUTION: The minimum temperature allowed for storing the units is 5°C.

12.2 UNIT AND AUXILIARY ELECTRICAL DATA

Unit power supply	V/~/Hz	230/1PH+PE/50*-400/3PH+PE/50**	**Remote controller circuit**	V/~/Hz	12/1/50
On board controller circuit	V/~/Hz	12/1/50	**Fans power supply**	V/~/Hz	230/1/50

For the 70R/RK, 90R/RK, 120R/RK, 140R/RK models * - For 160RT/RTK e 180R/RK models **

NOTE: The electrical data are subject to change due to updates. It is therefore always necessary to refer to the technical specifications label applied on the right side panel of the unit.

12.3 CORRECTIVE FACTORS

DIRTY EXCHANGER WITH WATER / REFRIGERANT PLATES

Dirt Factor [m^2 °C / kW]	Correction factor Thermal Power	Correction factor Input Power
$0,44 \times 10^{-1}$	1,00	1,00
$0,88 \times 10^{-1}$	0,99	1,00
$1,76 \times 10^{-1}$	0,98	1,00

ALTITUDE:

The performance correction factors according to altitude are calculated by cooling under conditions (2) and for heating under conditions (3) of the previous technical data tables.

Altitude [m]	500	1000	1500	2000
Correction factor Heating Power	0,9964	0,9941	0,9888	0,9869
Correction factor Input Power - Heating	0,9931	0,9841	0,9853	0,9755
Correction factor Cooling Power	0,9888	0,9762	0,9618	0,9466
Correction factor Input Power - Cooling	1,0106	1,0235	1,0386	1,0560

13 PRODUCT FICHE EU REGULATION 811/2013

PRODUCT FICHE - HP_OWER ONE R MODELS

for low-temperature application (Twater=35°C)

Supplier's name		UNICAL A.G. SPA					
Model		**70R-70RK**	**90R-90RK**	**120R-120RK**	**140R-140RK**	**160RT-160RTK**	**180R-180RK**
Seasonal space heating energy efficiency class		A+++	A+++	A+++	A+++	A+++	A+++
Rated heat output	average climate conditions	7 kW	7 kW	10 kW	12 kW	14 kW	15 kW
	colder climate conditions	9 kW	9 kW	12 kW	15 kW	16 kW	18 kW
	warmer climate conditions	6 kW	7 kW	10 kW	13 kW	14 kW	15 kW
Seasonal space heating energy efficiency	average climate conditions	175 %	176 %	176 %	176 %	177 %	175 %
	colder climate conditions	130 %	130 %	130 %	135 %	133 %	130 %
	warmer climate conditions	210 %	207 %	210 %	233 %	233 %	220 %
Annual energy consumption	average climate conditions	3179 kWh	3413 kWh	4631 kWh	5584 kWh	6210 kWh	6722 kWh
	colder climate conditions	6497 kWh	6797 kWh	9145 kWh	10931 kWh	11885 kWh	13000 kWh
	warmer climate conditions	1523 kWh	1684 kWh	2588 kWh	2944 kWh	3188 kWh	3624 kWh
Annual energy consumption in terms of final energy	average climate conditions	8085 kWh	8652 kWh	11776 kWh	14198 kWh	15789 kWh	17092 kWh
	colder climate conditions	16616 kWh	17384 kWh	23387 kWh	27936 kWh	30382 kWh	33251 kWh
	warmer climate conditions	3863 kWh	4270 kWh	6562 kWh	7456 kWh	8073 kWh	9183 kWh
SCOP	average climate conditions	4,46	4,46	4,47	4,48	4,49	4,46
	colder climate conditions	3,33	3,33	3,34	3,44	3,40	3,32
	warmer climate conditions	5,32	5,25	5,32	5,91	5,89	5,57
Sound power level, indoors L_{WA}		-	-	-	-	-	-
Sound power level, outdoor L_{WA}		64 dB(A)	64 dB(A)	65 dB(A)	68 dB(A)	68 dB(A)	68 dB(A)
Precautions for installation and maintenance		Read precautions for installation and maintenance at specific chapters on user's and installation's manual.					

Technical parameters for heat pump space heaters

Model	HP_OWER ONE 70R - 70RK
Air-to-water heat pump	Sì
Water-to-water heat pump	No
Brine-to-water heat pump	No
Low-temperature heat pump	No
Equipped with a supplementary heater	No
Heat pump combination heater	No
Parameters shall be declared for low-temperature application 35°C	
Parameters shall be declared for average climate condition	

Item	Symbol	Value	Unit
Nominal Thermal capacity	$P_{nominal}$	7	kW
Declared capacity for heating for part load at indoor temperature 20°C and outdoor temperature Tj			
T_j = -7°C	Pdh	6,1	kW
T_j = +2°C	Pdh	3,7	kW
T_j = +7°C	Pdh	3,2	kW
T_j = +12°C	Pdh	3,7	kW
T_j = bivalent temperature	Pdh	6,1	kW
T_j = Operation limit temperature	Pdh	6,1	kW
For air-to-water heat pump: T_j = -15°C (if TOL < -20°C)	Pdh	-	kW
Bivalent temperature	T_{biv}	-7	°C
Cycling interval capacity for heating	P_{cych}	-	kW
Degradation co-efficient T_j = 7°C	Cdh	0,967	-
Degradation co-efficient T_j = 12°C	Cdh	0,959	-
Power consumption in modes other than active mode			
Off mode	P_{off}	0,019	kW
Thermostat-off mode	P_{To}	0,019	kW
Standby mode	P_{SB}	0,019	kW
Crankcase heater mode	P_{CK}	0,030	kW
Other items			
Capacity control	variable		
Sound power level, indoors/outdoors	L_{WA}	- / 64	dB(A)
Annual energy consumption	Q_{HE}	3179	kWh

Item	Symbol	Value	Unit
Seasonal space heating energy efficiency	η_s	175	%
Declared coefficient of performace or primary energy ratio for part load at indoor temperature 20°C and outdoor temperature Tj			
T_j = -7°C	COP_d	2,96	
T_j = +2°C	COP_d	4,36	
T_j = +7°C	COP_d	5,56	
T_j = +12°C	COP_d	7,88	
T_j = bivalent temperature	COP_d	2,96	
T_j = Operation limit temperature	COP_d	2,73	
For air-to-water heat pump: Tj = -15°C (if TOL < -20°C)	COP_d	-	
For air-to-water heat pumps: Operation limit temperature	TOL	-20	°C
Cycling interval efficiency	COP_{cyc}	-	
Heating water operating limit temperature	WTOL	60	°C
Supplementary heater			
Rated heater output	P_{sup}	-	kW
Type of energy input	-		
For air-to-water heat pumps: rated air flow rate, outdoors	-	4200	m^3/h
For water- or brine-to-water heat pumps: rated brine or water flow rate, outdoor heat exchanger	-	-	m^3/h

Technical parameters for heat pump space heaters

Model	HP_OWER ONE 90R – 90RK
Air-to-water heat pump	Sì
Water-to-water heat pump	No
Brine-to-water heat pump	No
Low-temperature heat pump	No
Equipped with a supplementary heater	No
Heat pump combination heater	No
Parameters shall be declared for low-temperature application 35°C	
Parameters shall be declared for average climate condition	

Item	Symbol	Value	Unit
Nominal Thermal capacity	$P_{nominale}$	7	kW
Declared capacity for heating for part load at indoor temperature 20°C and outdoor temperature Tj			
T_j = -7°C	Pdh	6,5	kW
T_j = +2°C	Pdh	4,0	kW
T_j = +7°C	Pdh	3,1	kW
T_j = +12°C	Pdh	3,7	kW
T_j = bivalent temperature	Pdh	6,5	kW
T_j = Operation limit temperature	Pdh	6,5	kW
For air-to-water heat pump: T_j = -15°C (if TOL < -20°C)	Pdh	-	kW
Bivalent temperature	T_{biv}	-7	°C
Cycling interval capacity for heating	P_{cych}	-	kW
Degradation co-efficient T_j = 7°C	Cdh	0,966	-
Degradation co-efficient T_j = 12°C	Cdh	0,959	-
Power consumption in modes other than active mode			
Off mode	P_{off}	0,019	kW
Thermostat-off mode	P_{To}	0,019	kW
Standby mode	P_{SB}	0,019	kW
Crankcase heater mode	P_{CK}	0,030	kW
Other items			
Capacity control	variabile		
Sound power level, indoors/outdoors	L_{WA}	- / 64	dB(A)
Annual energy consumption	Q_{HE}	3413	kWh

Item	Symbol	Value	Unit
Seasonal space heating energy efficiency	η_s	176	%
Declared coefficient of performace or primary energy ratio for part load at indoor temperature 20°C and outdoor temperature Tj			
T_j = -7°C	COP_d	2,95	
T_j = +2°C	COP_d	4,37	
T_j = +7°C	COP_d	5,55	
T_j = +12°C	COP_d	7,86	
T_j = bivalent temperature	COP_d	2,95	
T_j = Operation limit temperature	COP_d	2,70	
For air-to-water heat pump: Tj = -15°C (if TOL < -20°C)	COP_d	-	
For air-to-water heat pumps: Operation limit temperature	TOL	-20	°C
Cycling interval efficiency	COP_{cyc}	-	
Heating water operating limit temperature	WTOL	60	°C
Supplementary heater			
Rated heater output	P_{sup}	-	kW
Type of energy input	-		
Pe For air-to-water heat pumps: rated air flow rate, outdoors	-	4500	m^3/h
Per le pompe di calore acqua o salamoia/acqua: flusso nominale di salamoia o acqua, scambiatore di calore all'esterno	-	-	m^3/h

Technical parameters for heat pump space heaters

Model	HP_OWER ONE 120R – 120RK
Air-to-water heat pump	Sì
Water-to-water heat pump	No
Brine-to-water heat pump	No
Low-temperature heat pump	No
Equipped with a supplementary heater	No
Heat pump combination heater	No
Parameters shall be declared for low-temperature application 35°C	
Parameters shall be declared for average climate condition	

Item	Symbol	Value	Unit
Nominal Thermal capacity	$P_{nominale}$	10	kW
Declared capacity for heating for part load at indoor temperature 20°C and outdoor temperature Tj			
T_j = -7°C	Pdh	8,9	kW
T_j = +2°C	Pdh	5,4	kW
T_j = +7°C	Pdh	4,3	kW
T_j = +12°C	Pdh	4,9	kW
T_j = bivalent temperature	Pdh	8,9	kW
T_j = Operation limit temperature	Pdh	8,8	kW
For air-to-water heat pump: T_j = -15°C (if TOL < -20°C)	Pdh	-	kW
Bivalent temperature	T_{biv}	-7	°C
Cycling interval capacity for heating	P_{cych}	-	kW
Degradation co-efficient T_j = 7°C	Cdh	0,974	-
Degradation co-efficient T_j = 12°C	Cdh	0,969	-
Power consumption in modes other than active mode			
Off mode	P_{off}	0,019	kW
Thermostat-off mode	P_{To}	0,019	kW
Standby mode	P_{SB}	0,019	kW
Crankcase heater mode	P_{CK}	0,030	kW
Other items			
Capacity control	variabile		
Sound power level, indoors/outdoors	L_{WA}	- / 65	dB(A)
Annual energy consumption	Q_{HE}	4631	kWh

Item	Symbol	Value	Unit
Seasonal space heating energy efficiency	η_s	176	%
Declared coefficient of performace or primary energy ratio for part load at indoor temperature 20°C and outdoor temperature Tj			
T_j = -7°C	COP_d	2,88	
T_j = +2°C	COP_d	4,31	
T_j = +7°C	COP_d	5,82	
T_j = +12°C	COP_d	7,81	
T_j = bivalent temperature	COP_d	2,88	
T_j = Operation limit temperature	COP_d	2,64	
For air-to-water heat pump: Tj = -15°C (if TOL < -20°C)	COP_d	-	
For air-to-water heat pumps: Operation limit temperature	TOL	-20	°C
Cycling interval efficiency	COP_{cyc}	-	
Heating water operating limit temperature	WTOL	60	°C
Supplementary heater			
Rated heater output	P_{sup}	-	kW
Type of energy input	-		
For air-to-water heat pumps: rated air flow rate, outdoors	-	5300	m^3/h
For water- or brine-to-water heat pumps: rated brine or water flow rate, outdoor heat exchanger	-	-	m^3/h

Technical parameters for heat pump space heaters

Model	HP_OWER ONE 140R – 140RK
Air-to-water heat pump	Sì
Water-to-water heat pump	No
Brine-to-water heat pump	No
Low-temperature heat pump	No
Equipped with a supplementary heater	No
Heat pump combination heater	No
Parameters shall be declared for low-temperature application 35°C	
Parameters shall be declared for average climate condition	

Item	Symbol	Value	Unit
Nominal Thermal capacity	$P_{nominale}$	12	kW
Declared capacity for heating for part load at indoor temperature 20°C and outdoor temperature Tj			
T_j = -7°C	Pdh	10,7	kW
T_j = +2°C	Pdh	6,5	kW
T_j = +7°C	Pdh	5,8	kW
T_j = +12°C	Pdh	6,7	kW
T_j = bivalent temperature	Pdh	10,7	kW
T_j = Operation limit temperature	Pdh	10,5	kW
For air-to-water heat pump: T_j = -15°C (if TOL < -20°C)	Pdh	-	kW
Bivalent temperature	T_{biv}	-7	°C
Cycling interval capacity for heating	P_{cych}	-	kW
Degradation co-efficient T_j = 7°C	Cdh	0,980	-
Degradation co-efficient T_j = 12°C	Cdh	0,977	-
Power consumption in modes other than active mode			
Off mode	P_{off}	0,019	kW
Thermostat-off mode	P_{To}	0,019	kW
Standby mode	P_{SB}	0,019	kW
Crankcase heater mode	P_{CK}	0,030	kW
Other items			
Capacity control	variabile		
Sound power level, indoors/outdoors	L_{WA}	- / 68	dB(A)
Annual energy consumption	Q_{HE}	5584	kWh

Item	Symbol	Value	Unit
Seasonal space heating energy efficiency	η_s	176	%
Declared coefficient of performace or primary energy ratio for part load at indoor temperature 20°C and outdoor temperature Tj			
T_j = -7°C	COP_d	2,98	
T_j = +2°C	COP_d	4,20	
T_j = +7°C	COP_d	5,98	
T_j = +12°C	COP_d	8,16	
T_j = bivalent temperature	COP_d	2,98	
T_j = Operation limit temperature	COP_d	2,69	
For air-to-water heat pump: Tj = -15°C (if TOL < -20°C)	COP_d	-	
For air-to-water heat pumps: Operation limit temperature	TOL	-20	°C
Cycling interval efficiency	COP_{cyc}	-	
Heating water operating limit temperature	WTOL	60	°C
Supplementary heater			
Rated heater output	P_{sup}	-	kW
Type of energy input	-		
For air-to-water heat pumps: rated air flow rate, outdoors	-	9800	m^3/h
For water- or brine-to-water heat pumps: rated brine or water flow rate, outdoor heat exchanger	-	-	m^3/h

Technical parameters for heat pump space heaters

Model	HP_OWER ONE 160RT – 160RTK
Air-to-water heat pump	Sì
Water-to-water heat pump	No
Brine-to-water heat pump	No
Low-temperature heat pump	No
Equipped with a supplementary heater	No
Heat pump combination heater	No
Parameters shall be declared for low-temperature application 35°C	
Parameters shall be declared for average climate condition	

Item	Symbol	Value	Unit
Nominal Thermal capacity	$P_{nominale}$	14	kW
Declared capacity for heating for part load at indoor temperature 20°C and outdoor temperature Tj			
T_j = -7°C	Pdh	12,0	kW
T_j = +2°C	Pdh	7,3	kW
T_j = +7°C	Pdh	5,7	kW
T_j = +12°C	Pdh	6,7	kW
T_j = bivalent temperature	Pdh	12,0	kW
T_j = Operation limit temperature	Pdh	11,7	kW
For air-to-water heat pump: T_j = -15°C (if TOL < -20°C)	Pdh	-	kW
Bivalent temperature	T_{biv}	-7	°C
Cycling interval capacity for heating	P_{cych}	-	kW
Degradation co-efficient T_j = 7°C	Cdh	0,981	-
Degradation co-efficient T_j = 12°C	Cdh	0,977	-
Power consumption in modes other than active mode			
Off mode	P_{off}	0,019	kW
Thermostat-off mode	P_{To}	0,019	kW
Standby mode	P_{SB}	0,019	kW
Crankcase heater mode	P_{CK}	0,030	kW
Other items			
Capacity control	variabile		
Sound power level, indoors/outdoors	L_{WA}	- / 68	dB(A)
Annual energy consumption	Q_{HE}	6210	kWh

Item	Symbol	Value	Unit
Seasonal space heating energy efficiency	η_s	177	%
Declared coefficient of performace or primary energy ratio for part load at indoor temperature 20°C and outdoor temperature Tj			
T_j = -7°C	COP_d	2,88	
T_j = +2°C	COP_d	4,33	
T_j = +7°C	COP_d	5,83	
T_j = +12°C	COP_d	8,12	
T_j = temperatura bivalente	COP_d	2,88	
T_j = bivalent temperature	COP_d	2,60	
T_j = Operation limit temperature	COP_d	-	
For air-to-water heat pump: Tj = -15°C (if TOL < -20°C)	TOL	-20	°C
For air-to-water heat pumps: Operation limit temperature	COP_{cyc}	-	
Cycling interval efficiency	WTOL	60	°C
Supplementary heater			
Rated heater output	P_{sup}	-	kW
Type of energy input	-		
For air-to-water heat pumps: rated air flow rate, outdoors	-	10000	m^3/h
For water- or brine-to-water heat pumps: rated brine or water flow rate, outdoor heat exchanger	-	-	m^3/h

Technical parameters for heat pump space heaters

Model	HP_OWER ONE 180R – 180RK
Air-to-water heat pump	Sì
Water-to-water heat pump	No
Brine-to-water heat pump	No
Low-temperature heat pump	No
Equipped with a supplementary heater	No
Heat pump combination heater	No
Parameters shall be declared for low-temperature application 35°C	
Parameters shall be declared for average climate condition	

Item	Symbol	Value	Unit
Nominal Thermal capacity	$P_{nominale}$	15	kW
Declared capacity for heating for part load at indoor temperature 20°C and outdoor temperature Tj			
T_j = -7°C	Pdh	12,8	kW
T_j = +2°C	Pdh	7,8	kW
T_j = +7°C	Pdh	5,8	kW
T_j = +12°C	Pdh	6,7	kW
T_j = bivalent temperature	Pdh	12,8	kW
T_j = Operation limit temperature	Pdh	12,8	kW
For air-to-water heat pump: T_j = -15°C (if TOL < -20°C)	Pdh	-	kW
Bivalent temperature	T_{biv}	-7	°C
Cycling interval capacity for heating	P_{cych}	-	kW
Degradation co-efficient T_j = 7°C	Cdh	0,981	-
Degradation co-efficient T_j = 12°C	Cdh	0,977	-
Power consumption in modes other than active mode			
Off mode	P_{off}	0,019	kW
Thermostat-off mode	P_{To}	0,019	kW
Standby mode	P_{SB}	0,019	kW
Crankcase heater mode	P_{CK}	0,030	kW
Other items			
Capacity control	variabile		
Sound power level, indoors/outdoors	L_{WA}	- / 68	dB(A)
Annual energy consumption	Q_{HE}	6722	kWh

Item	Symbol	Value	Unit
Seasonal space heating energy efficiency	η_s	175	%
Declared coefficient of performace or primary energy ratio for part load at indoor temperature 20°C and outdoor temperature Tj			
T_j = -7°C	COP_d	2,83	
T_j = +2°C	COP_d	4,34	
T_j = +7°C	COP_d	5,67	
T_j = +12°C	COP_d	7,94	
T_j = bivalent temperature	COP_d	2,83	
T_j = Operation limit temperature	COP_d	2,59	
For air-to-water heat pump: Tj = -15°C (if TOL < -20°C)	COP_d	-	
For air-to-water heat pumps: Operation limit temperature	TOL	-20	°C
Cycling interval efficiency	COP_{cyc}	-	
Heating water operating limit temperature	WTOL	60	°C
Supplementary heater			
Rated heater output	P_{sup}	-	kW
Type of energy input	-		
For air-to-water heat pumps: rated air flow rate, outdoors	-	10300	m^3/h
For water- or brine-to-water heat pumps: rated brine or water flow rate, outdoor heat exchanger	-	-	m^3/h

PRODUCT FICHE - HP_OWER ONE R MODELS

for medium-temperature application (Twater=55°C)

Supplier's name		UNICAL A.G. SPA					
Model		**70R-70RK**	**90R-90RK**	**120R-120RK**	**140R-140RK**	**160RT-160RTK**	**180R-180RK**
Seasonal space heating energy efficiency class		A++	A++	A++	A++	A++	A++
Rated heat output	average climate conditions	7 kW	7 kW	10 kW	12 kW	13 kW	14 kW
	colder climate conditions	8 kW	9 kW	12 kW	15 kW	16 kW	17 kW
	warmer climate conditions	6 kW	7 kW	10 kW	12 kW	14 kW	15 kW
Seasonal space heating energy efficiency	average climate conditions	126 %	128 %	131 %	130 %	126 %	131 %
	colder climate conditions	92 %	108 %	108 %	107 %	110 %	108 %
	warmer climate conditions	153 %	155 %	156 %	173 %	172 %	163 %
Annual energy consumption	average climate conditions	4191 kWh	4496 kWh	5942 kWh	7260 kWh	8359 kWh	8660 kWh
	colder climate conditions	8785 kWh	7861 kWh	10688 kWh	13132 kWh	13817 kWh	14996 kWh
	warmer climate conditions	2155 kWh	2247 kWh	3434 kWh	3774 kWh	4193 kWh	4689 kWh
Annual energy consumption in terms of final energy	average climate conditions	10728 kWh	11503 kWh	15195 kWh	18570 kWh	21395 kWh	22145 kWh
	colder climate conditions	22677 kWh	20196 kWh	27463 kWh	33748 kWh	35481 kWh	38531 kWh
	warmer climate conditions	5492 kWh	5726 kWh	8750 kWh	9598 kWh	10664 kWh	11938 kWh
SCOP							
	average climate conditions	3,21	3,27	3,36	3,31	3,22	3,36
	colder climate conditions	2,38	2,78	2,78	2,76	2,84	2,78
	warmer climate conditions	3,91	3,94	3,98	4,40	4,38	4,16
Sound power level, indoors L_{WA}		-	-	-	-	-	-
Sound power level, outdoor L_{WA}		64 dB(A)	64 dB(A)	65 dB(A)	68 dB(A)	68 dB(A)	68 dB(A)
Precautions for installation and maintenance		Read precautions for installation and maintenance at specific chapters on user's and installation's manual.					

Technical parameters for heat pump space heaters

Model	HP_OWER ONE 70R – 70RK
Air-to-water heat pump	Sì
Water-to-water heat pump	No
Brine-to-water heat pump	No
Low-temperature heat pump	No
Equipped with a supplementary heater	No
Heat pump combination heater	No
Parameters shall be declared for medium-temperature application 35°C	
Parameters shall be declared for average climate condition	

Item	Symbol	Value	Unit
Nominal Thermal capacity	$P_{nominale}$	7	kW
Declared capacity for heating for part load at indoor temperature 20°C and outdoor temperature Tj			
T_j = -7°C	Pdh	5,8	kW
T_j = +2°C	Pdh	3,6	kW
T_j = +7°C	Pdh	3,0	kW
T_j = +12°C	Pdh	3,6	kW
T_j = bivalent temperature	Pdh	5,8	kW
T_j = Operation limit temperature	Pdh	6,0	kW
For air-to-water heat pump: T_j = -15°C (if TOL < -20°C)	Pdh	-	kW
Bivalent temperature	T_{biv}	-7	°C
Cycling interval capacity for heating	P_{cych}	-	kW
Degradation co-efficient T_j = 7°C	Cdh	0,978	-
Degradation co-efficient T_j = 12°C	Cdh	0,966	-
Power consumption in modes other than active mode			
Off mode	P_{off}	0,019	kW
Thermostat-off mode	P_{To}	0,019	kW
Standby mode	P_{SB}	0,019	kW
Crankcase heater mode	P_{CK}	0,030	kW
Other items			
Capacity control	variable		
Sound power level, indoors/outdoors	L_{WA}	- / 64	dB(A)
Annual energy consumption	Q_{HE}	4191	kWh

Item	Symbol	Value	Unit
Seasonal space heating energy efficiency	η_s	126	%
Declared coefficient of performace or primary energy ratio for part load at indoor temperature 20°C and outdoor temperature Tj			
T_j = -7°C	COP_d	2,08	
T_j = +2°C	COP_d	3,30	
T_j = +7°C	COP_d	3,49	
T_j = +12°C	COP_d	6,49	
T_j = bivalent temperature	COP_d	2,08	
T_j = Operation limit temperature	COP_d	1,95	
For air-to-water heat pump: Tj = -15°C (if TOL < -20°C)	COP_d	-	
For air-to-water heat pumps: Operation limit temperature	TOL	-15	°C
Cycling interval efficiency	COP_{cyc}	-	
Heating water operating limit temperature	WTOL	60	°C
Supplementary heater			
Rated heater output	P_{sup}	-	kW
Type of energy input	-		
For air-to-water heat pumps: rated air flow rate, outdoors	-	4200	m^3/h
For water- or brine-to-water heat pumps: rated brine or water flow rate, outdoor heat exchanger	-	-	m^3/h

Technical parameters for heat pump space heaters

Model	HP_OWER ONE 90R – 90RK
Air-to-water heat pump	Sì
Water-to-water heat pump	No
Brine-to-water heat pump	No
Low-temperature heat pump	No
Equipped with a supplementary heater	No
Heat pump combination heater	No
Parameters shall be declared for medium-temperature application 35°C	
Parameters shall be declared for average climate condition	

Item	Symbol	Value	Unit
Nominal Thermal capacity	$P_{nominale}$	7	kW
Declared capacity for heating for part load at indoor temperature 20°C and outdoor temperature Tj			
T_j = -7°C	Pdh	6,3	kW
T_j = +2°C	Pdh	3,8	kW
T_j = +7°C	Pdh	3,1	kW
T_j = +12°C	Pdh	3,6	kW
T_j = bivalent temperature	Pdh	6,3	kW
T_j = Operation limit temperature	Pdh	6,4	kW
For air-to-water heat pump: T_j = -15°C (if TOL < -20°C)	Pdh	-	kW
Bivalent temperature	T_{biv}	-7	°C
Cycling interval capacity for heating	P_{cych}	-	kW
Degradation co-efficient T_j = 7°C	Cdh	0,976	-
Degradation co-efficient T_j = 12°C	Cdh	0,967	-
Power consumption in modes other than active mode			
Off mode	P_{off}	0,019	kW
Thermostat-off mode	P_{To}	0,019	kW
Standby mode	P_{SB}	0,019	kW
Crankcase heater mode	P_{CK}	0,030	kW
Other items			
Capacity control	variabile		
Sound power level, indoors/outdoors	L_{WA}	- / 64	dB(A)
Annual energy consumption	Q_{HE}	4496	kWh

Item	Symbol	Value	Unit
Seasonal space heating energy efficiency	η_s	128	%
Declared coefficient of performace or primary energy ratio for part load at indoor temperature 20°C and outdoor temperature Tj			
T_j = -7°C	COP_d	1,91	
T_j = +2°C	COP_d	3,33	
T_j = +7°C	COP_d	3,90	
T_j = +12°C	COP_d	6,30	
T_j = bivalent temperature	COP_d	1,91	
T_j = Operation limit temperature	COP_d	1,95	
For air-to-water heat pump: Tj = -15°C (if TOL < -20°C)	COP_d	-	
For air-to-water heat pumps: Operation limit temperature	TOL	-15	°C
Cycling interval efficiency	COP_{cyc}	-	
Heating water operating limit temperature	WTOL	60	°C
Supplementary heater			
Rated heater output	P_{sup}	-	kW
Type of energy input	-		
For air-to-water heat pumps: rated air flow rate, outdoors	-	4500	m^3/h
For water- or brine-to-water heat pumps: rated brine or water flow rate, outdoor heat exchanger	-	-	m^3/h

Technical parameters for heat pump space heaters

Model	HP_OWER ONE 120R – 120RK
Air-to-water heat pump	Sì
Water-to-water heat pump	No
Brine-to-water heat pump	No
Low-temperature heat pump	No
Equipped with a supplementary heater	No
Heat pump combination heater	No
Parameters shall be declared for medium-temperature application 35°C	
Parameters shall be declared for average climate condition	

Item	Symbol	Value	Unit
Nominal Thermal capacity	$P_{nominale}$	10	kW
Declared capacity for heating for part load at indoor temperature 20°C and outdoor temperature Tj			
T_j = -7°C	Pdh	8,5	kW
T_j = +2°C	Pdh	5,2	kW
T_j = +7°C	Pdh	4,2	kW
T_j = +12°C	Pdh	4,8	kW
T_j = bivalent temperature	Pdh	8,5	kW
T_j = Operation limit temperature	Pdh	8,7	kW
For air-to-water heat pump: T_j = -15°C (if TOL < -20°C)	Pdh	-	kW
Bivalent temperature	T_{biv}	-7	°C
Cycling interval capacity for heating	P_{cych}	-	kW
Degradation co-efficient T_j = 7°C	Cdh	0,981	-
Degradation co-efficient T_j = 12°C	Cdh	0,979	-
Power consumption in modes other than active mode			
Off mode	P_{off}	0,019	kW
Thermostat-off mode	P_{To}	0,019	kW
Standby mode	P_{SB}	0,019	kW
Crankcase heater mode	P_{CK}	0,030	kW
Other items			
Capacity control	variabile		
Sound power level, indoors/outdoors	L_{WA}	- / 65	dB(A)
Annual energy consumption	Q_{HE}	5942	kWh

Item	Symbol	Value	Unit
Seasonal space heating energy efficiency	η_s	131	%
Declared coefficient of performace or primary energy ratio for part load at indoor temperature 20°C and outdoor temperature Tj			
T_j = -7°C	COP_d	2,08	
T_j = +2°C	COP_d	3,35	
T_j = +7°C	COP_d	4,24	
T_j = +12°C	COP_d	5,31	
T_j = bivalent temperature	COP_d	2,08	
T_j = Operation limit temperature	COP_d	1,96	
For air-to-water heat pump: Tj = -15°C (if TOL < -20°C)	COP_d	-	
For air-to-water heat pumps: Operation limit temperature	TOL	-15	°C
Cycling interval efficiency	COP_{cyc}	-	
Heating water operating limit temperature	WTOL	60	°C
Supplementary heater			
Rated heater output	P_{sup}	-	kW
Type of energy input	-		
For air-to-water heat pumps: rated air flow rate, outdoors	-	5300	m^3/h
For water- or brine-to-water heat pumps: rated brine or water flow rate, outdoor heat exchanger	-	-	m^3/h

Technical parameters for heat pump space heaters

Model	HP_OWER ONE 140R – 140RK
Air-to-water heat pump	Sì
Water-to-water heat pump	No
Brine-to-water heat pump	No
Low-temperature heat pump	No
Equipped with a supplementary heater	No
Heat pump combination heater	No
Parameters shall be declared for medium-temperature application 35°C	
Parameters shall be declared for average climate condition	

Item	Symbol	Value	Unit
Nominal Thermal capacity	$P_{nominale}$	12	kW
Declared capacity for heating for part load at indoor temperature 20°C and outdoor temperature Tj			
T_j = -7°C	Pdh	10,3	kW
T_j = +2°C	Pdh	6,2	kW
T_j = +7°C	Pdh	5,7	kW
T_j = +12°C	Pdh	6,6	kW
T_j = bivalent temperature	Pdh	10,3	kW
T_j = Operation limit temperature	Pdh	10,2	kW
For air-to-water heat pump: T_j = -15°C (if TOL < -20°C)	Pdh	-	kW
Bivalent temperature	T_{biv}	-7	°C
Cycling interval capacity for heating	P_{cych}	-	kW
Degradation co-efficient T_j = 7°C	Cdh	0,986	-
Degradation co-efficient T_j = 12°C	Cdh	0,982	-
Power consumption in modes other than active mode			
Off mode	P_{off}	0,019	kW
Thermostat-off mode	P_{To}	0,019	kW
Standby mode	P_{SB}	0,019	kW
Crankcase heater mode	P_{CK}	0,030	kW
Other items			
Capacity control	variabile		
Sound power level, indoors/outdoors	L_{WA}	- / 68	dB(A)
Annual energy consumption	Q_{HE}	7260	kWh

Item	Symbol	Value	Unit
Seasonal space heating energy efficiency	η_s	130	%
Declared coefficient of performace or primary energy ratio for part load at indoor temperature 20°C and outdoor temperature Tj			
T_j = -7°C	COP_d	2,10	
T_j = +2°C	COP_d	3,21	
T_j = +7°C	COP_d	4,19	
T_j = +12°C	COP_d	6,17	
T_j = bivalent temperature	COP_d	2,10	
T_j = Operation limit temperature	COP_d	1,96	
For air-to-water heat pump: Tj = -15°C (if TOL < -20°C)	COP_d	-	
For air-to-water heat pumps: Operation limit temperature	TOL	-15	°C
Cycling interval efficiency	COP_{cyc}	-	
Heating water operating limit temperature	WTOL	60	°C
Supplementary heater			
Rated heater output	P_{sup}	-	kW
Type of energy input	-		
For air-to-water heat pumps: rated air flow rate, outdoors	-	9800	m^3/h
For water- or brine-to-water heat pumps: rated brine or water flow rate, outdoor heat exchanger	-	-	m^3/h

Technical parameters for heat pump space heaters

Model	HP_OWER ONE 160RT – 160RTK
Air-to-water heat pump	Sì
Water-to-water heat pump	No
Brine-to-water heat pump	No
Low-temperature heat pump	No
Equipped with a supplementary heater	No
Heat pump combination heater	No
Parameters shall be declared for medium-temperature application 35°C	
Parameters shall be declared for average climate condition	

Item	Symbol	Value	Unit
Nominal Thermal capacity	$P_{nominale}$	13	kW
Declared capacity for heating for part load at indoor temperature 20°C and outdoor temperature Tj			
T_j = -7°C	Pdh	11,5	kW
T_j = +2°C	Pdh	6,9	kW
T_j = +7°C	Pdh	5,5	kW
T_j = +12°C	Pdh	6,6	kW
T_j = bivalent temperature	Pdh	11,5	kW
T_j = Operation limit temperature	Pdh	11,5	kW
For air-to-water heat pump: T_j = -15°C (if TOL < -20°C)	Pdh	-	kW
Bivalent temperature	T_{biv}	-7	°C
Cycling interval capacity for heating	P_{cych}	-	kW
Degradation co-efficient T_j = 7°C	Cdh	0,986	-
Degradation co-efficient T_j = 12°C	Cdh	0,982	-
Power consumption in modes other than active mode			
Off mode	P_{off}	0,019	kW
Thermostat-off mode	P_{To}	0,019	kW
Standby mode	P_{SB}	0,019	kW
Crankcase heater mode	P_{CK}	0,030	kW
Other items			
Capacity control	variabile		
Sound power level, indoors/outdoors	L_{WA}	- / 68	dB(A)
Annual energy consumption	Q_{HE}	8359	kWh

Item	Symbol	Value	Unit
Seasonal space heating energy efficiency	η_s	126	%
Declared coefficient of performace or primary energy ratio for part load at indoor temperature 20°C and outdoor temperature Tj			
T_j = -7°C	COP_d	2,09	
T_j = +2°C	COP_d	3,06	
T_j = +7°C	COP_d	4,11	
T_j = +12°C	COP_d	6,30	
T_j = bivalent temperature	COP_d	2,09	
T_j = Operation limit temperature	COP_d	1,94	
For air-to-water heat pump: Tj = -15°C (if TOL < -20°C)	COP_d	-	
For air-to-water heat pumps: Operation limit temperature	TOL	-15	°C
Cycling interval efficiency	COP_{cyc}	-	
Heating water operating limit temperature	WTOL	60	°C
Apparecchio di riscaldamento supplementare			
Rated heater output	P_{sup}	-	kW
Type of energy input	-		
For air-to-water heat pumps: rated air flow rate, outdoors	-	10000	m^3/h
For water- or brine-to-water heat pumps: rated brine or water flow rate, outdoor heat exchanger	-	-	m^3/h

Technical parameters for heat pump space heaters

Model	HP_OWER ONE 180R – 180RK
Air-to-water heat pump	Sì
Water-to-water heat pump	No
Brine-to-water heat pump	No
Low-temperature heat pump	No
Equipped with a supplementary heater	No
Heat pump combination heater	No
Parameters shall be declared for medium-temperature application 35°C	
Parameters shall be declared for average climate condition	

Item	Symbol	Value	Unit
Nominal Thermal capacity	$P_{nominale}$	14	kW
Declared capacity for heating for part load at indoor temperature 20°C and outdoor temperature Tj			
T_j = -7°C	Pdh	12,5	kW
T_j = +2°C	Pdh	7,6	kW
T_j = +7°C	Pdh	5,7	kW
T_j = +12°C	Pdh	6,6	kW
T_j = bivalent temperature	Pdh	12,5	kW
T_j = Operation limit temperature	Pdh	12,6	kW
For air-to-water heat pump: T_j = -15°C (if TOL < -20°C)	Pdh	-	kW
Bivalent temperature	T_{biv}	-7	°C
Cycling interval capacity for heating	P_{cych}	-	kW
Degradation co-efficient T_j = 7°C	Cdh	0,986	-
Degradation co-efficient T_j = 12°C	Cdh	0,982	-
Power consumption in modes other than active mode			
Off mode	P_{off}	0,019	kW
Thermostat-off mode	P_{To}	0,019	kW
Standby mode	P_{SB}	0,019	kW
Crankcase heater mode	P_{CK}	0,030	kW
Other items			
Capacity control	variabile		
Sound power level, indoors/outdoors	L_{WA}	- / 68	dB(A)
Annual energy consumption	Q_{HE}	8660	kWh

Item	Symbol	Value	Unit
Nominal Thermal capacity	η_s	131	%
Declared coefficient of performace or primary energy ratio for part load at indoor temperature 20°C and outdoor temperature Tj			
T_j = -7°C	COP_d	2,03	
T_j = +2°C	COP_d	3,34	
T_j = +7°C	COP_d	4,14	
T_j = +12°C	COP_d	6,15	
T_j = bivalent temperature	COP_d	2,03	
T_j = Operation limit temperature	COP_d	1,93	
For air-to-water heat pump: Tj = -15°C (if TOL < -20°C)	COP_d	-	
For air-to-water heat pumps: Operation limit temperature	TOL	-15	°C
Cycling interval efficiency	COP_{cyc}	-	
Heating water operating limit temperature	WTOL	60	°C
Supplementary heater			
Rated heater output	P_{sup}	-	kW
Type of energy input	-		
For air-to-water heat pumps: rated air flow rate, outdoors	-	10300	m^3/h
For water- or brine-to-water heat pumps: rated brine or water flow rate, outdoor heat exchanger	-	-	m^3/h

14 HYDRAULIC CIRCUIT AVAILABLE HEAD PRESSURE

Below the characteristic curves corresponding to Head pressure -Water flow without head losses of the hydronic kit. The optimal operating point is shown on each curve under the specified conditions at the apex (4).
The circuit's plant must be designed so as to ensure the nominal water flow rate corresponding to the operating points indicated below.

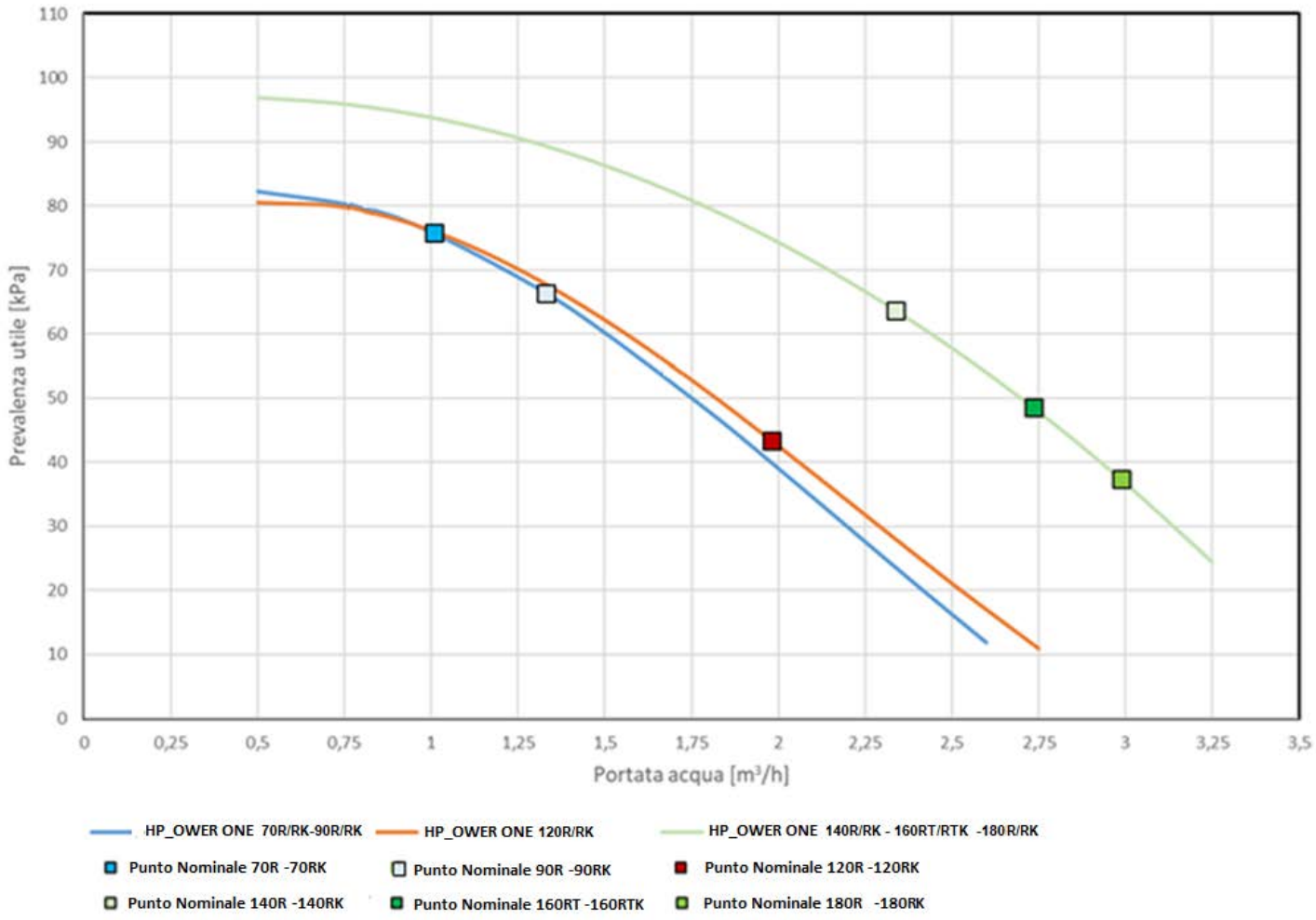

Here also the range of the available head pressures that the unit can provide during the circulator modulation periode.

HP_OWER ONE 70R - 70RK - 90R - 90RK

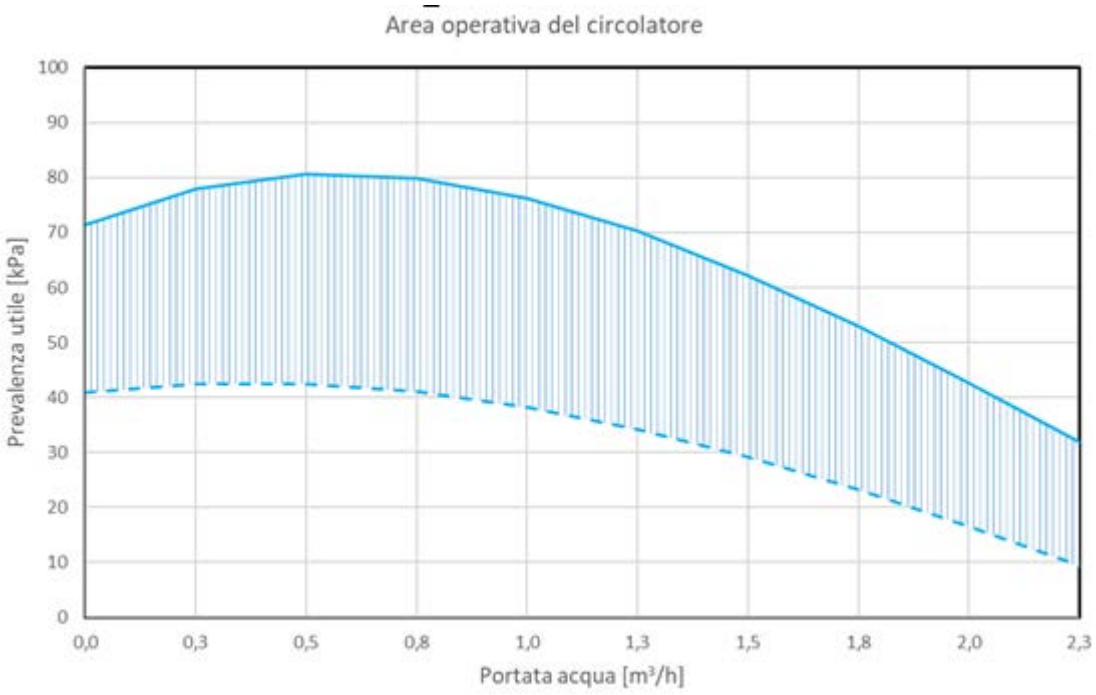

HP_OWER ONE 120R - 120RK

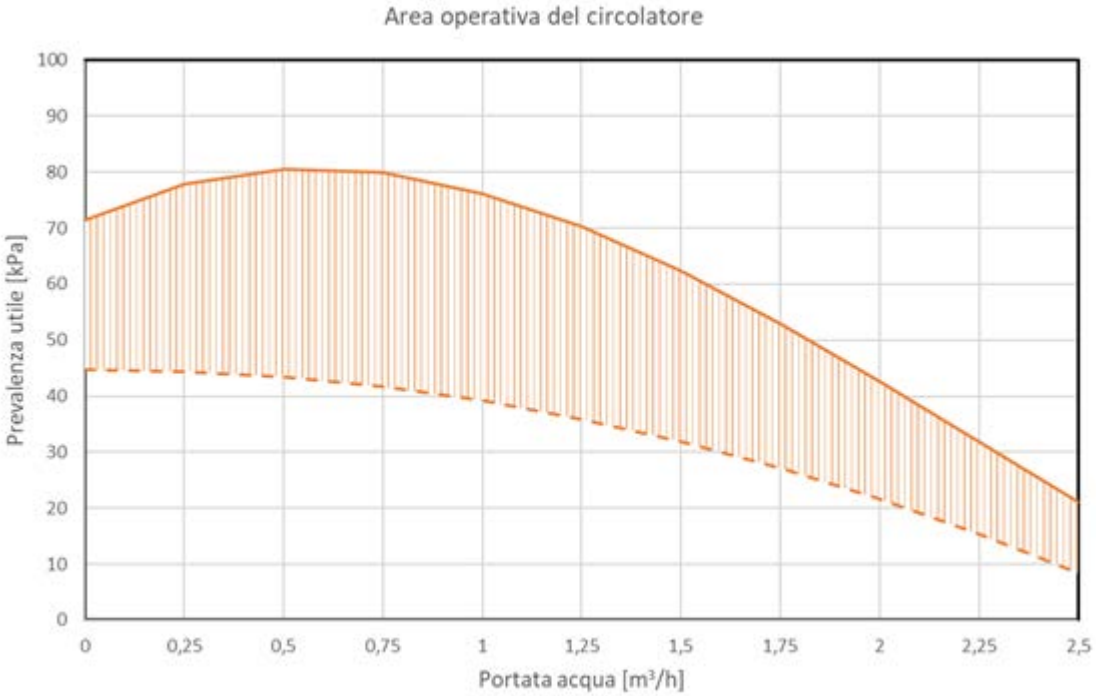

HP_OWER ONE 140R - 140RK - 160RT -160RTK – 180R - 180 RK

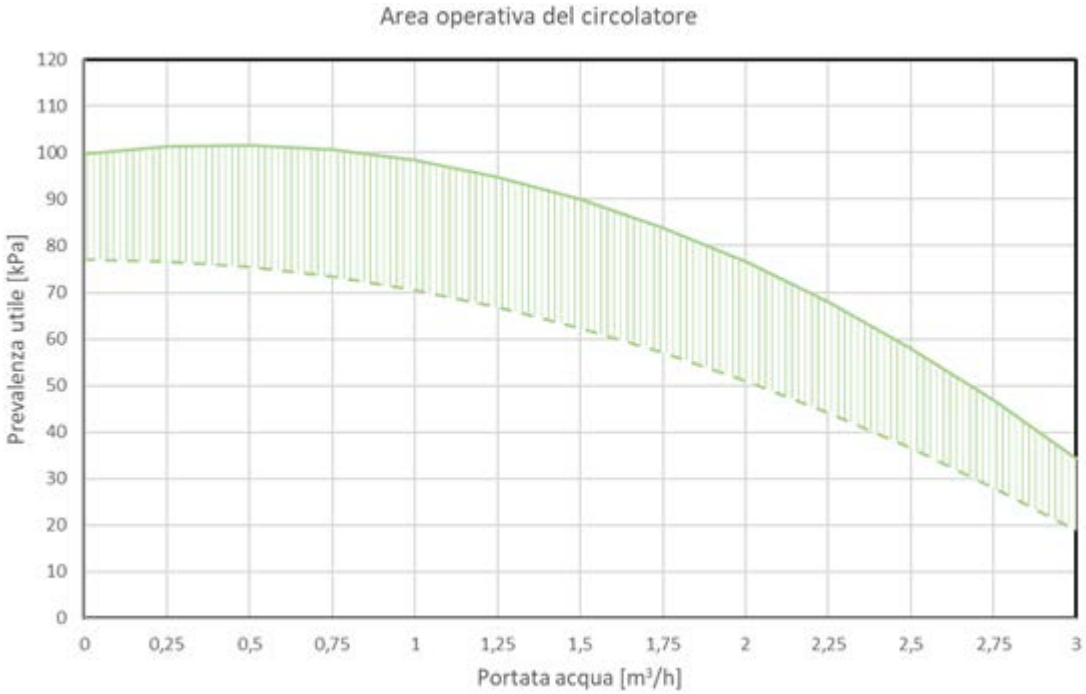

15 OPERATING LIMITS

15.1 EVAPORATOR WATER FLOW RATE

The nominal water flow rate refers to a 5°C temperature difference between the evaporator inlet and outlet. The maximum permitted flow rate features a 3°C temperature difference while the minimum one has an 8°C temperature difference at the nominal conditions as shown in the technical sheet.

Insufficient water flow rates can cause excessively low evaporation temperatures causing the safety devices to trigger and stopping the unit and, in some extreme cases, forming ice in the evaporator and resulting in serious failures to the cooling circuit.

For greater details, we have attached a table below with the minimum flow rates for the plate heat exchanger to guarantee proper operation according to the model (please note: the water flow switch is applied to protect against failed triggering of the antifreeze probe due to the lack of flow but does not guarantee the minimum water flow rate required for correct operation of the unit).

Model	HP_OWER ONE					
	70R-70RK	90R-90RK	120R-120RK	140R-140RK	160RT-160RTK	180R-180RK
Minimum water flow to be assured in chiller mode (condition (2) technical sheet) [l/s]	0,15	0,17	0,25	0,34	0,34	0,41
Maximum water flow to be assured in chiller mode (condition (2) technical sheet) [l/s]	0,40	0,46	0,68	0,92	0,92	1,10
Minimum flow switch water flow rate* [l/s]	0,117	0,117	0,153	0,153	0,262	0,262
Maximum flow switch water flow rate* [l/s]	0,132	0,132	0,175	0,175	0,293	0,293

Performance referring to the following conditions:
(2) Cooling: outdoor air temperature 35°C; in/out water temperature 12/ 7°C.

* When the flow rate drops below the indicated limit (flow switch minimum water flow rate) the flow switch issues an alarm, which may be reset only upon reaching the maximum indicated flow rate.

15.2 COLD WATER PRODUCTION (SUMMER MODE)

A minimum temperature of 5°C is allowed at the evaporator outlet: for lower temperatures, contact the Technical Department. In this case contact our technical department to study the feasibility and assess the changes to be made according to demands. A maximum temperature of 25°C can be maintained at the evaporator outlet in steady-state operation.

15.3 HOT WATER PRODUCTION (WINTER MODE)

When the system has reached steady state, the water inlet temperature must not drop below 25°C: lower values, not due to transient phases or reaching steady-state, can cause system failures and could possibly break the compressor. The maximum outlet water temperature must not exceed 60°C.
There could be failures to the regular operation of the unit or, in more critical cases, the safety devices could be triggered due to temperatures higher than those indicated, especially if coupled with reduced water flow rates.

15.4 AMBIENT AIR TEMPERATURE AND SUMMARISED TABLE

The units are designed and built to operate in summer mode, with condensation control, at outdoor air temperatures between -10°C and +46°C. In heat pump mode, the allowed temperature range of the outdoor air is from-20°C to +40°C depending on the outlet water temperature as shown in the table below.

Operating limits

Water chiller mode		
Room temperature	Minimum -10°C	Maximum +46°C
Outlet water temperature	Minimum +5°C	Maximum +25°C
Heat pump mode		
Room temperature	Minimum -20°C	Maximum +30°C
Outlet water temperature	Minimum +25°C	Maximum +60°C
Heat pump mode for domestic hot water		
Room temperature with water at maximum 39°C	Minimum -20°C	Maximum +40°C
Room temperature with water at maximum 55°C	Minimum -10°C	Maximum +35°C
Outlet water temperature	Minimum +25°C	Maximum +60°C

The following are the graphical operating limits for air-conditioning and domestic hot water production.

HEAT PUMP MODE

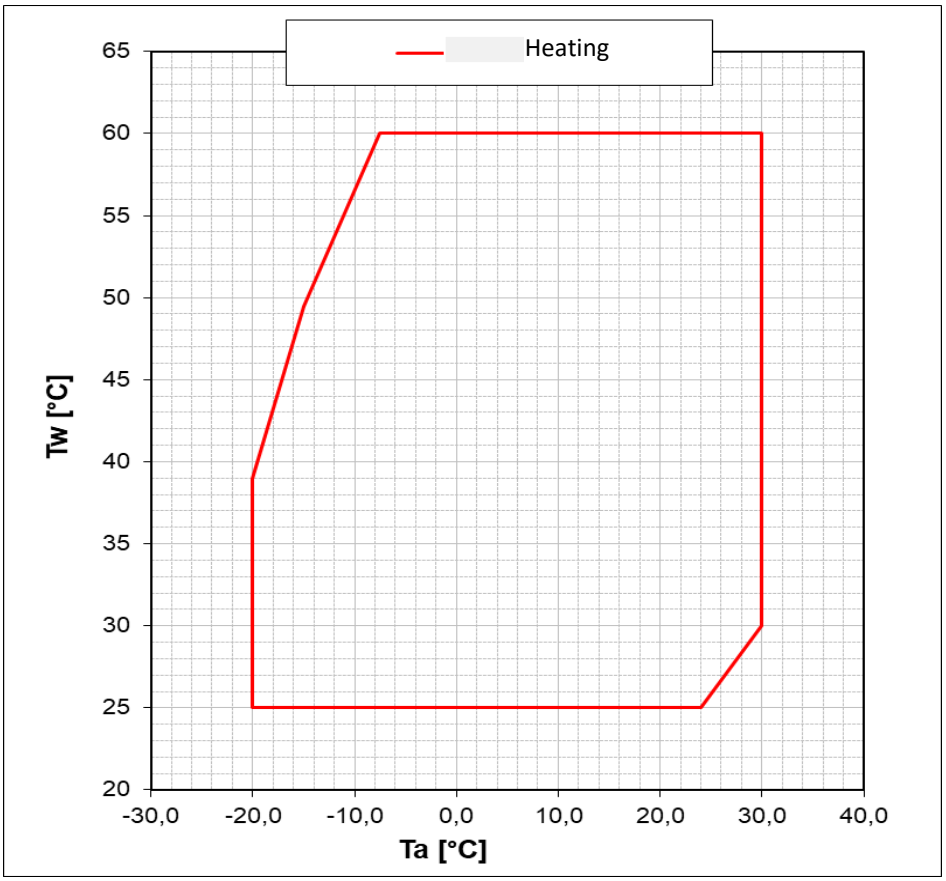

CHILLER MODE

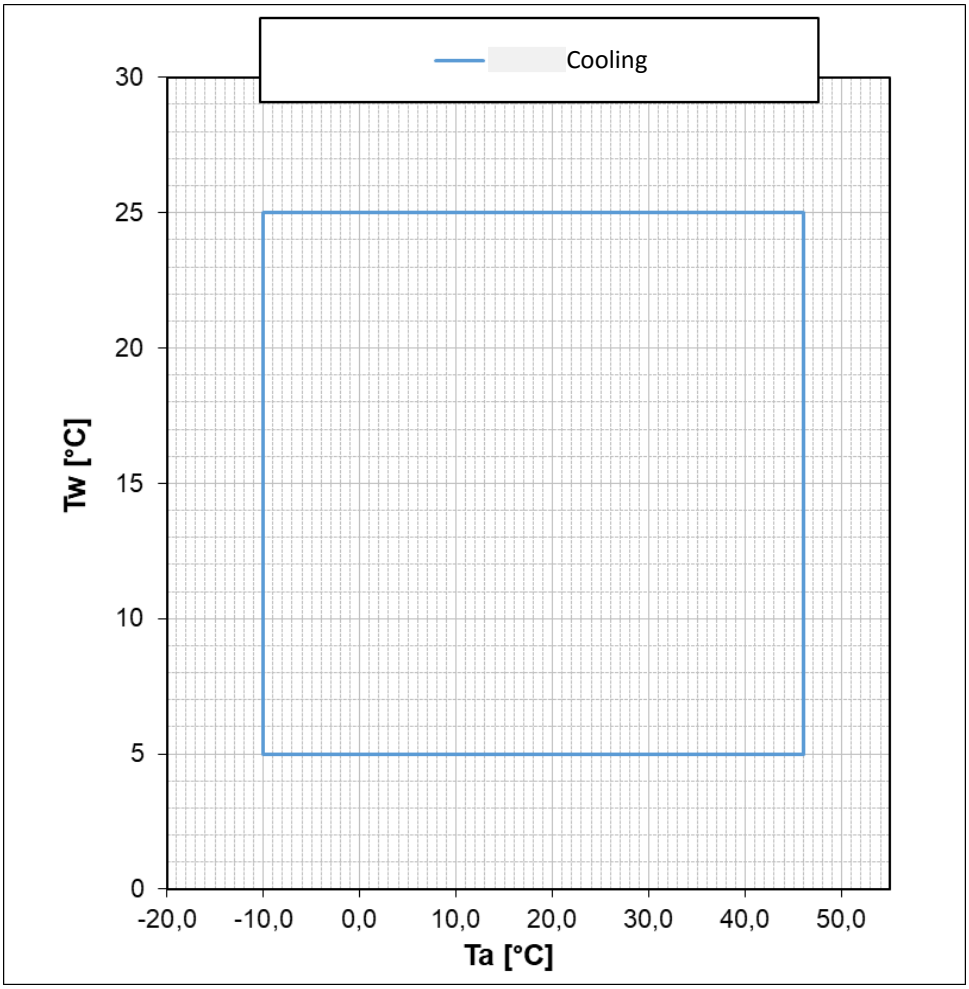

DOMESTIC HOT WATER MODE

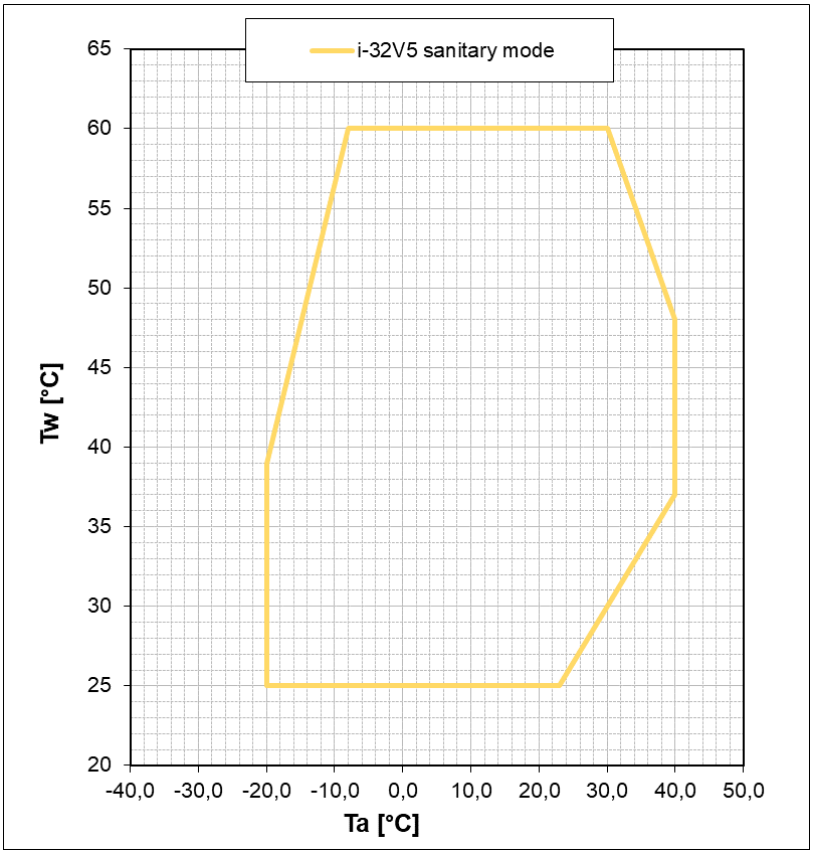

16 CORRECTION FACTORS FOR USE OF GLYCOL

Glycol rate	Freezing point (°C)	CCF	IPCF	WFCF	PDCF
10%	-3,2	0,985	1	1,02	1,08
20%	-7,8	0,98	0,99	1,05	1,12
30%	-14,1	0,97	0,98	1,10	1,22
40%	-22,3	0,965	0,97	1,14	1,25
50%	-33,8	0,955	0,965	1,2	1,33

CCF: Capacity correction factor
IPCF: Input power correction factor
WFCF: Water flow rate correction factor
PDCF: Pressure drops correction factor

The water flow rate and pressure drop correction factors are to be applied directly to the values given for operation without glycol. The water flow rate correction factor is calculated in order to get the same temperature's difference that would be obtained without glycol. The pressure drops' correction factor takes into account the different water flow rate obtained from the application of the water flow rate correction factor.

DHW mode

17 DIMENSIONS

17.1.1 Model HP_OWER ONE 70R - 70RK - 90R - 90RK

IN/OUT: 1”M G
E: power supply input

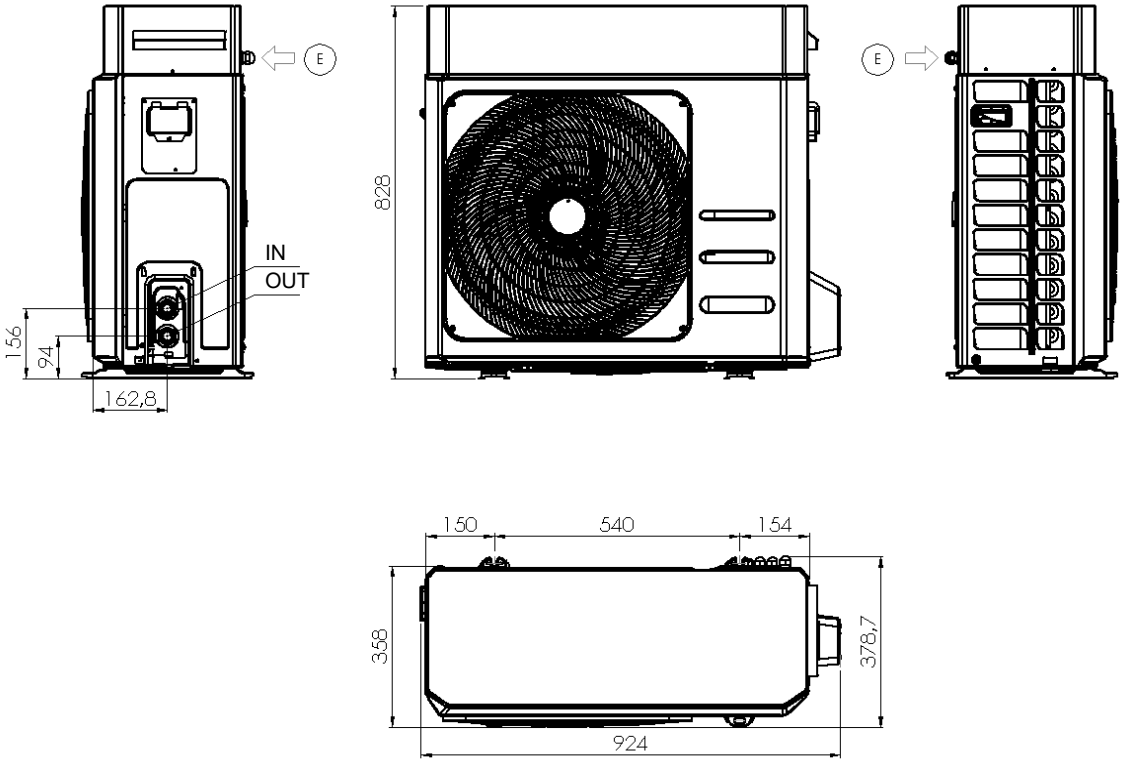

17.1.2 Model HP_OWER ONE 120R - 120RK

IN/OUT: 1”M G
E: power supply input

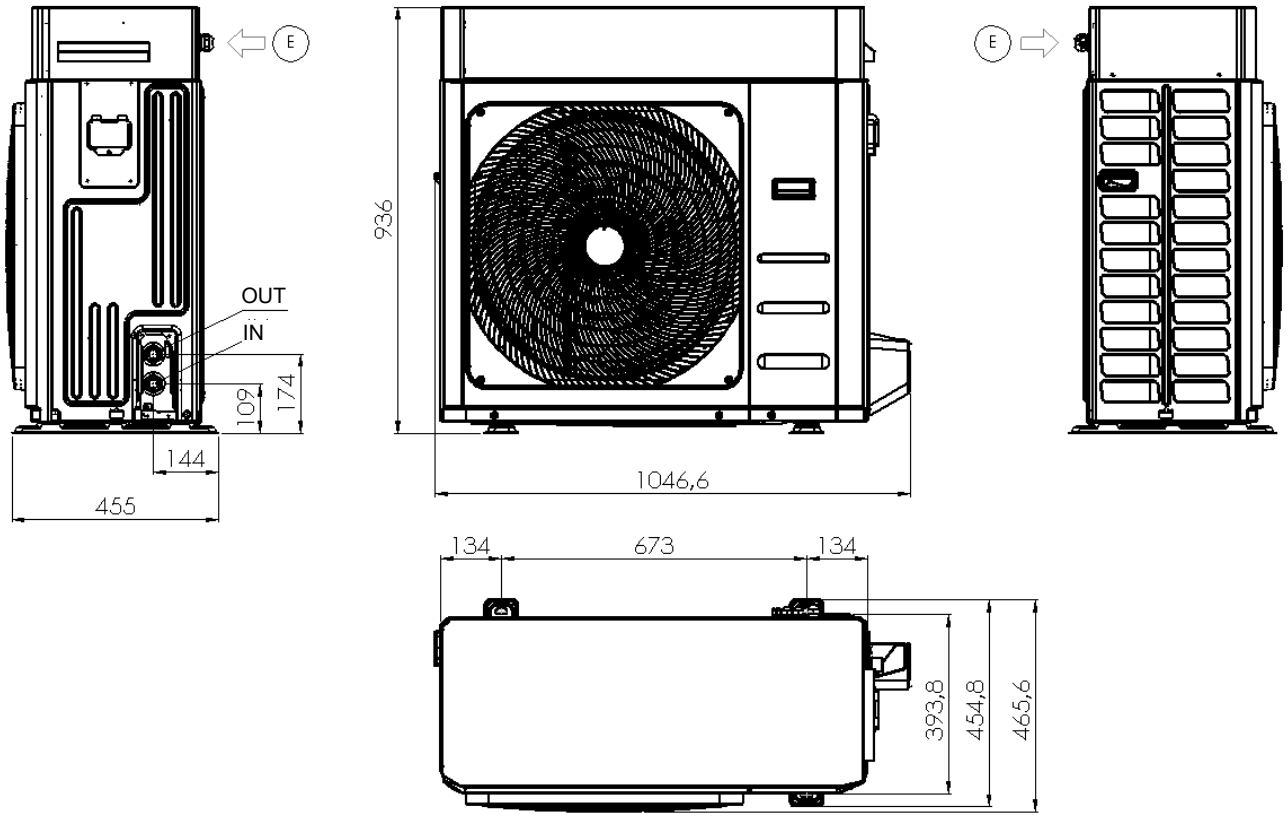

17.1.3 Model HP_OWER ONE 140R - 140RK - 160RT - 160RTK - 180R - 180RK

IN/OUT: 1”M G
E: power supply input

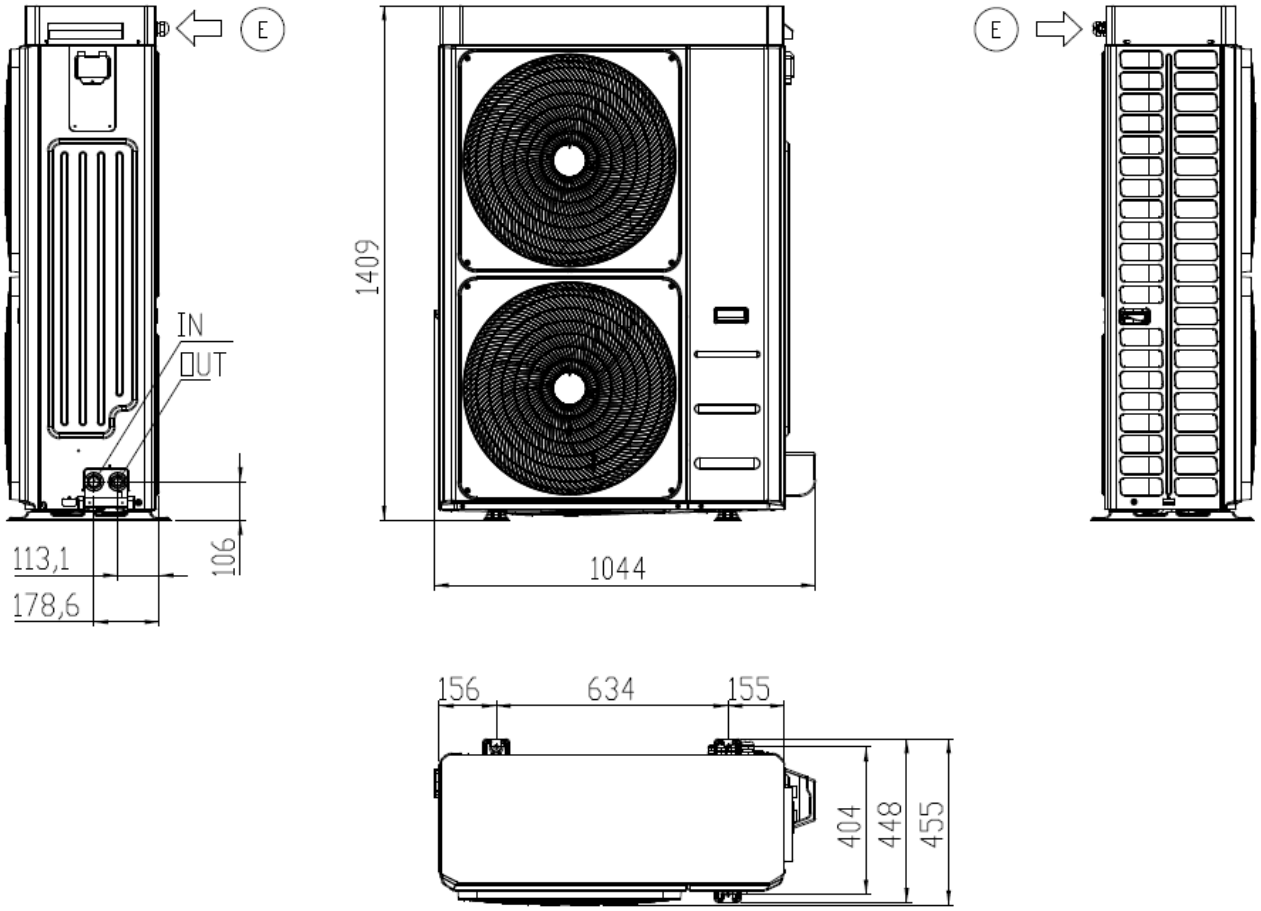

17.2 A
C
C
E
S

17.3 SING THE INNER PARTS

17.3.1 Mod. HP_OWER ONE 70R - 70RK - 90R - 90RK

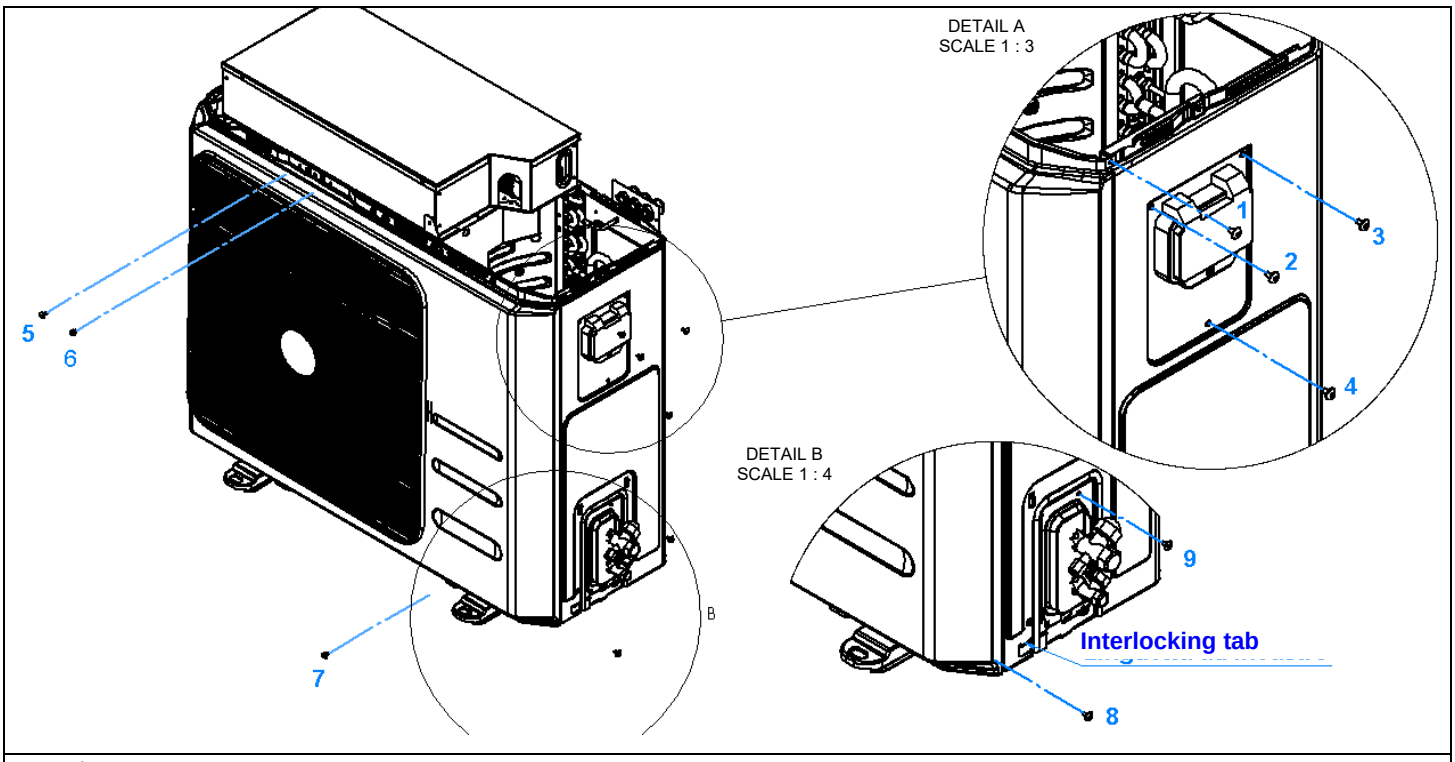

1) Remove the cover
2) Undo the screws (number 2; 3; 4) of the sheet metal cover of the user interface and the screw (number 1) of the side panel to separate the front sheet metal from the side panel (Detail A).
3) Undo in sequence the screws (number 5; 6;7) in order to move the front panel slightly forward and to be able to reach the screw (number 8) visible in detail B.
4) Undo the screws (number 8; 9 visible in detail B) and those on the coil side of the unit. To remove the side panel, pull it upwards (to free the tab at the base indicated as C in detail B) and remove it.

17.3.2 Mod. HP_OWER ONE 120R - 120RK

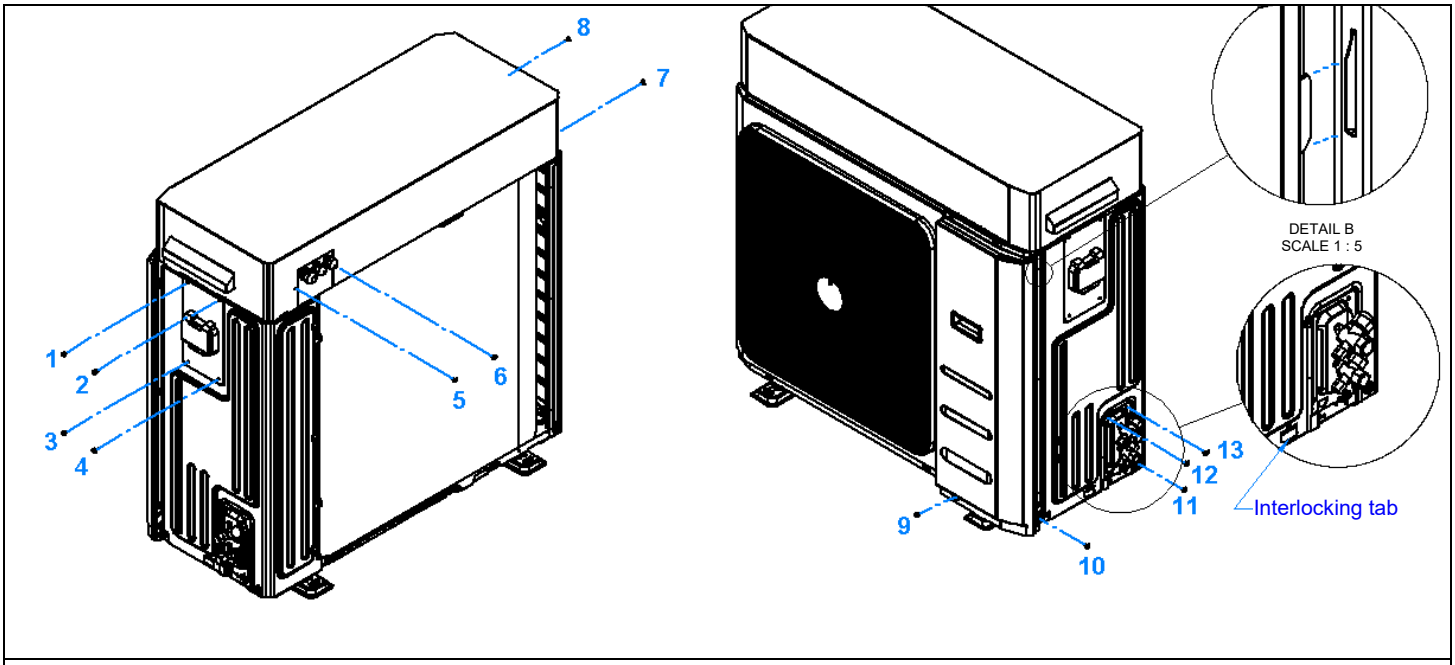

1) Remove the cover by undoing the screws (number 1; 2; 3; 4; 5; 6; 7; 8).
2) Undo the screws (number 9; 10) of the front sheet and then push the panel downwards to remove the tabs (Detail A); pull the panel forward to remove it.
3) Undo the screws (number 11; 12;13) and those on the coil side of the unit. To remove the side panel, pull it upwards (to free the tab at the base indicated as C in detail B) and remove it.

17.3.3 Mod. HP_OWER ONE 140R - 140RK - 160RT - 160RTK - 180R - 180RK

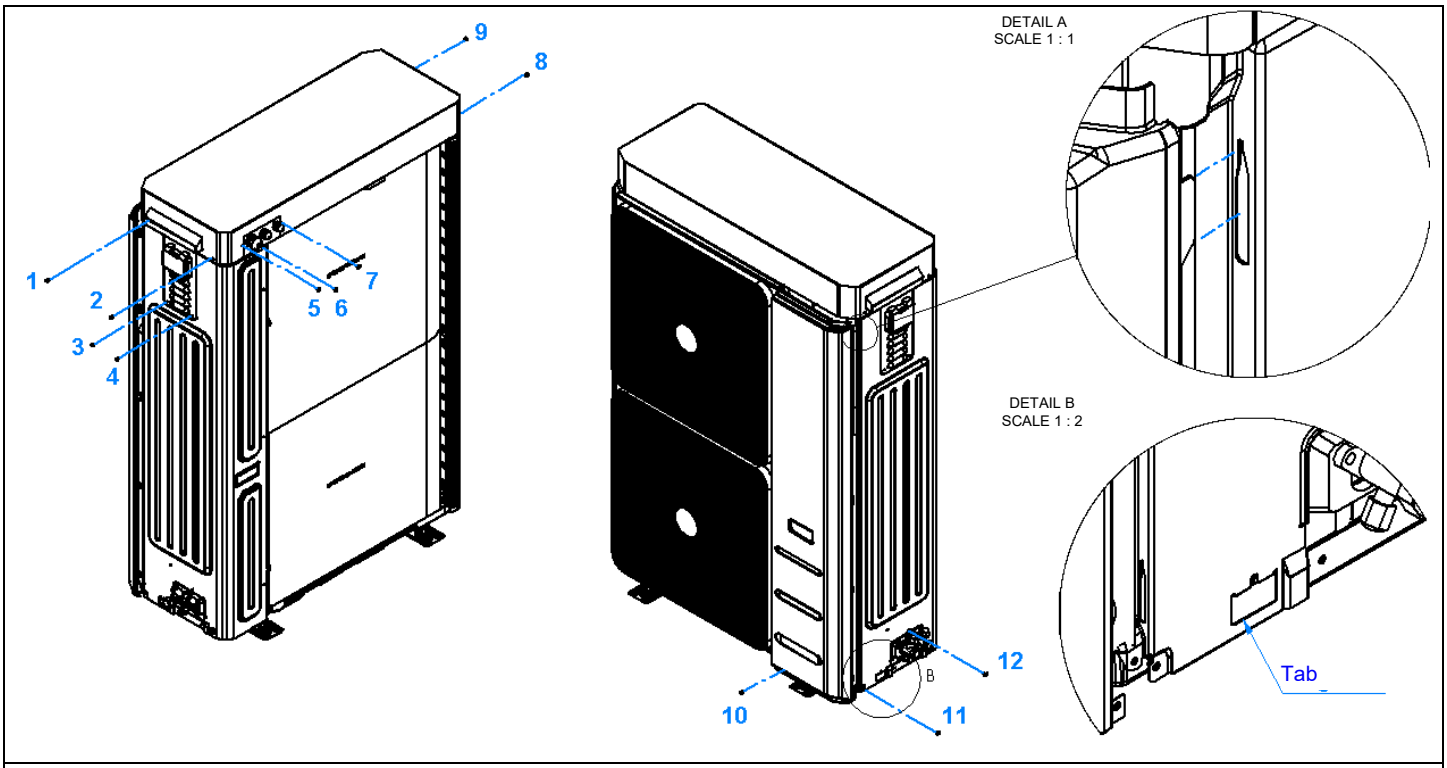

1) Remove the cover by undoing the screws (number 1; 2; 3; 4; 5; 6; 7; 8;9).
2) Undo the screws (number 10; 11) of the front sheet and then push the panel downwards to remove the tabs (Detail A); pull the panel forward to remove it.
3) Undo the screw (number 12) and those on the coil side of the unit. To remove the side panel, pull it upwards (to free the tab at the base indicated as C in detail B) and remove it.

18 REGISTER OF OPERATIONS OF MAINTENANCE

Unical

LOG OPERATIONS

Installation Place .....
User Name .....
Model .....
Installation Date .....

1ª			Stamp
CHECK ELECTRICAL CONNECTIONS	YES ☐	NO ☐	
CHECK NO REFRIGERANT LOSS	YES ☐	NO ☐	
CHECK HYDRAULIC CONNECTIONS	YES ☐	NO ☐	
CHECK CIRCUIT PH AND ANTIFREEZE %	YES ☐	NO ☐	
CLEANING FINNED EXCHANGER	YES ☐	NO ☐	Date .....
CHECK DRAINAGE DRAIN VALVE SECURITY	YES ☐	NO ☐	Signature .....
CHECK DRAINAGE DRAIN DEFROST PAN	YES ☐	NO ☐	
CHECK STAFF AND ABSENCE OF VIBRATIONS	YES ☐	NO ☐	
CHECK EXPANSION VASE	YES ☐	NO ☐	
CHECK NO OIL LEAKS	YES ☐	NO ☐	
CHECK GOOD FUNCTIONING	YES ☐	NO ☐	
CLEANING METAL FILTERS	YES ☐	NO ☐	
OTHER			

2ª			Stamp
CHECK ELECTRICAL CONNECTIONS	YES ☐	NO ☐	
CHECK NO REFRIGERANT LOSS	YES ☐	NO ☐	
CHECK HYDRAULIC CONNECTIONS	YES ☐	NO ☐	
CHECK CIRCUIT PH AND ANTIFREEZE %	YES ☐	NO ☐	
CLEANING FINNED EXCHANGER	YES ☐	NO ☐	Date .....
CHECK DRAINAGE DRAIN VALVE SECURITY	YES ☐	NO ☐	Signature .....
CHECK DRAINAGE DRAIN DEFROST PAN	YES ☐	NO ☐	
CHECK STAFF AND ABSENCE OF VIBRATIONS	YES ☐	NO ☐	
CHECK EXPANSION VASE	YES ☐	NO ☐	
CHECK NO OIL LEAKS	YES ☐	NO ☐	
CHECK GOOD FUNCTIONING	YES ☐	NO ☐	
CLEANING METAL FILTERS	YES ☐	NO ☐	
OTHER			

3ª			Stamp
CHECK ELECTRICAL CONNECTIONS	YES ☐	NO ☐	
CHECK NO REFRIGERANT LOSS	YES ☐	NO ☐	
CHECK HYDRAULIC CONNECTIONS	YES ☐	NO ☐	
CHECK CIRCUIT PH AND ANTIFREEZE %	YES ☐	NO ☐	
CLEANING FINNED EXCHANGER	YES ☐	NO ☐	Date .....
CHECK DRAINAGE DRAIN VALVE SECURITY	YES ☐	NO ☐	Signature .....
CHECK DRAINAGE DRAIN DEFROST PAN	YES ☐	NO ☐	
CHECK STAFF AND ABSENCE OF VIBRATIONS	YES ☐	NO ☐	
CHECK EXPANSION VASE	YES ☐	NO ☐	
CHECK NO OIL LEAKS	YES ☐	NO ☐	
CHECK GOOD FUNCTIONING	YES ☐	NO ☐	
CLEANING METAL FILTERS	YES ☐	NO ☐	
OTHER			

4ª				
	CHECK ELECTRICAL CONNECTIONS	YES ☐	NO ☐	**Stamp**
	CHECK NO REFRIGERANT LOSS	YES ☐	NO ☐	
	CHECK HYDRAULIC CONNECTIONS	YES ☐	NO ☐	
	CHECK CIRCUIT PH AND ANTIFREEZE %	YES ☐	NO ☐	
	CLEANING FINNED EXCHANGER	YES ☐	NO ☐	Date .....
	CHECK DRAINAGE DRAIN VALVE SECURITY	YES ☐	NO ☐	Signature .....
	CHECK DRAINAGE DRAIN DEFROST PAN	YES ☐	NO ☐	
	CHECK STAFF AND ABSENCE OF VIBRATIONS	YES ☐	NO ☐	
	CHECK EXPANSION VASE	YES ☐	NO ☐	
	CHECK NO OIL LEAKS	YES ☐	NO ☐	
	CHECK GOOD FUNCTIONING	YES ☐	NO ☐	
	CLEANING METAL FILTERS	YES ☐	NO ☐	
	OTHER			

5				
	CHECK ELECTRICAL CONNECTIONS	YES ☐	NO ☐	**Stamp**
	CHECK NO REFRIGERANT LOSS	YES ☐	NO ☐	
	CHECK HYDRAULIC CONNECTIONS	YES ☐	NO ☐	
	CHECK CIRCUIT PH AND ANTIFREEZE %	YES ☐	NO ☐	
	CLEANING FINNED EXCHANGER	YES ☐	NO ☐	Date .....
	CHECK DRAINAGE DRAIN VALVE SECURITY	YES ☐	NO ☐	Signature .....
	CHECK DRAINAGE DRAIN DEFROST PAN	YES ☐	NO ☐	
	CHECK STAFF AND ABSENCE OF VIBRATIONS	YES ☐	NO ☐	
	CHECK EXPANSION VASE	YES ☐	NO ☐	
	CHECK NO OIL LEAKS	YES ☐	NO ☐	
	CHECK GOOD FUNCTIONING	YES ☐	NO ☐	
	CLEANING METAL FILTERS	YES ☐	NO ☐	
	OTHER			

Unical®

www.unical.eu

00338957EN - ed. 3 - 10/2020

Unical AG S.p.A. 46033 casteldario - mantova - italia - tel. +39 0376 57001 - fax +39 0376 660556
info@unical-ag.com - export@unical-ag.com - www.unical.eu